CONFIDENTIAL RD

7015

CCN

FACILITY FORM 602

~~X66 91926~~
(ACCESSION NUMBER)
(THRU)
441
(PAGES)
5A
(CODE)
(NASA CR OR TMX OR AD NUMBER)
(CATEGORY)

DAVID NOVIK

a proposal to

AEC-NASA

for

DAVID NOVIK DAVID NOVIK

(NO-61004) DEVELOPMENT OF THE NERVA NUCLEAR ROCKET ENGINE AND ASSOCIATED TASKS. VOLUME 1: TECHNICAL DISCUSSION AND PROGRAM PLAN (Aerojet-General Corp., Azusa, Calif.) 441 p
N75-75446
Unclas
00/98 25270

NERVA

AN AMENDMENT TO CONTRACT SNP-1

Recd Cash Only 4/10/63

VOL. I –TECHNICAL DISCUSSION AND PROGRAM PLAN

PROPOSAL NO-61004

DECEMBER 1961

COPY NO. 12

AGC-5000.12 (REV.)

Aerojet-General® CORPORATION

THE GENERAL TIRE

A SUBSIDIARY OF THE GENERAL TIRE & RUBBER COMPANY

Available to NASA Offices and NASA Centers Only.

RESTRICTED DATA

CONFIDENTIAL • ATOMIC ENERGY ACT OF 1954

~~CONFIDENTIAL — RD~~

~~RESTRICTED DATA~~
~~ATOMIC ENERGY ACT OF 1954~~

CLASSIFICATION CHANGE
To UNCLASSIFIED
By authority of NASA Tgs TD-R1-370
Changed by O. Gladstone 6/30/75
Classified Document Station, NASA
Scientific and Technical Information Facility

A Proposal To

The AEC-NASA
SPACE NUCLEAR PROPULSION OFFICE

For

Additional Work Under Contract SNP-1

for the period

11 January 1962 through 30 September 1962

DEVELOPMENT OF THE NERVA NUCLEAR ROCKET ENGINE AND ASSOCIATED TASKS [U]

VOLUME I - TECHNICAL DISCUSSION AND PROGRAM PLAN [U]

Proposal NO-61004

December 1961

~~NOTE 1: This document contains information affecting the national defense of the United States within the meaning of the Espionage Laws, Title 18, USC, Sections 793 and 794. The transmission or the revelation of its contents in any manner to an unauthorized person is prohibited by law.~~

NOTE 2: This document and the data furnished herein or herewith shall not be duplicated, used, or disclosed in whole or in part for any purpose other than to evaluate the proposal with which it is furnished. If a contract amendment be awarded to Aerojet-General Corporation or its nominees as a result of or in connection with this proposal or the material in this document, the terms of this legend shall not be modified except in accordance with provision of such contract.

RECEIVED JUL 1975

AEROJET-GENERAL CORPORATION

Azusa, California

Available to NASA Offices and NASA Centers Only.

~~CONFIDENTIAL — RD~~

~~EXCLUDED FROM THE GDS~~

VOLUME I CONTENTS

I. OBJECTIVE

II. INTRODUCTION

A. Proposal Content

B. Program Participants

III. DESCRIPTION OF NERVA ENGINE DEVELOPMENT PROGRAM AND ASSOCIATED TASKS THROUGH COMPLETION OF PFRT

A. Program Definition

B. General Development Approach

C. Critical Development Areas

D. Status of Major Elements

IV. TECHNICAL DISCUSSION

A. General Discussion

B. Engine System and Subsystems

1. Engine System

2. Propellant-Feed System

3. Reactor Subassembly

4. Thrust-Chamber Assembly

5. Engine Controls

6. Destruct Subsystem

7. Pneumatic Power Supply

8. Pressurization System

9. Component-Irradiation Test System

C. Engine-Support System

1. Support-Equipment System

2. Diagnostic Instrumentation

3. Field Support

CONTENTS (cont.)

4 Reliability and Quality-Control Program

5. Safety

6. Training

7. LASL Support

D. National Nuclear Rocket Development Center Support

1. Master Planning

2. Engine Test Stand 1 (ETS-1)

3. ETS-2

4. E-MAD Facility Complex

5 Reactor Development Facility

6. CITS Facility

E. Program Management

1 PERT System

2. Fiscal Control

3. Reporting

4. Assessment of Data

F. Facilities and Associated Special Test Equipment

1. Facilities

2. Special Test Equipment

CONTENTS (cont.)

	Table
NERVA Engine Development Participants	II-1
Estimated Propellant Requirements	III-A-1
Critical Components	III-C-1
Design Information List for Performance Characteristics	IV-C-4-1
Environmental Influence Factors	IV-C-4-2
Design Information for Evaluation of Failures Due to Environments	IV-C-4-3
Facility Application Analysis	IV-D-1-1
Contractor-Furnished Facilities	IV-F-1-1

	Figure
Heated-Bleed Cycle, NERVA Engine	III-A-1
Program Summary	III-A-2
Key Milestones	III-A-3
Test Schedules	III-A-4
Facility Milestones	III-A-5
Program Planning Master Network	III-A-6
CITS Milestones	III-A-7
Cumulative Hardware Demand and Component Test Schedules	III-A-8
Test Facility Utilization	III-A-9
NERVA Engine Layout, Heated-Bleed Cycle	IV-B-1-1
Nuclear Rocket Engine Assembly, Hot-Bleed Cycle	IV-B-1-2
Generation II (Mod 1) NERVA Engine Simulator	IV-B-1-3
Mockup	IV-B-1-4
Program Planning Network, Task Item 1.1 - Engine System Development	IV-B-1-5

CONTENTS (cont.)

	Figure
Hardware Demand Schedule	IV-B-1-6
Component/Subassembly Test Schedule - Engine System (Task Item 1.1)	IV-B-1-7
Generation II (Mod 2) NERVA Engine Simulator	IV-B-1-8
Engine System Development Schedules and Milestones	IV-B-1-9
Non-Nuclear Engine Test System (NETS), Conceptual Design	IV-B-1-10
Component/Subassembly Test Schedule - Propellant Feed System (Task Item 1.2)	IV-B-2-1
Program Planning Network, Task Item 1.2 - Propellant Feed System	IV-B-2-2
Remote-Disconnect Concept	IV-B-2-3
Bearing Test Rig	IV-B-2-4
52100 Steel Bearing	IV-B-2-5
Cageless Bearing	IV-B-2-6
Boost Pump - Gear-Driven, Line-Mounted	IV-B-2-7
Propellant Feed Installation, NERVA Heated-Bleed	IV-B-2-8
Program Planning Network, Task Item 1.3 - Reactor Subassembly (Includes Reactor Controls System)	IV-B-3-1
Approximate Fast-Neutron Flux Level Around Shielded Reference Core	IV-B-3-2
Gamma Flux Levels Around Reference Shielded Core	IV-B-3-3
Reactor Subassembly, Top-Loaded Core	IV-B-3-4
Reactor Subassembly, Bottom-Loaded Core	IV-B-3-5
Component/Subassembly Test Schedule - Reactor Subassembly (Task Item 1.3)	IV-B-3-6

CONTENTS (cont.)

	Figure
Thrust-Chamber Assembly, NERVA Heated-Bleed	IV-B-4-1
Program Planning Network, Task Item 1.4 - Thrust-Chamber Assembly	IV-B-4-2
Thrust-Chamber Assembly Schedules and Milestones	IV-B-4-3
Component/Subassembly Test Schedule, Thrust-Chamber Assembly (Task Item 1.4)	IV-B-4-4
Program Planning Network, Task Item 1.5 - Engine Controls	IV-B-5-1
Engine Controls Schedules and Milestones	IV-B-5-2
Component/Subassembly Task Schedule, Engine Controls (Task Item 1.5)	IV-B-5-3
Program Planning Network, Task Item 1.6 - Destruct System	IV-B-6-1
Destruct System Schedules and Milestones	IV-B-6-2
Schematic, Pneumatic Supply System, Redundant Type	IV-B-7-1
Schematic, Pneumatic Supply System, Redundant Storage	IV-B-7-2
Schematic, Pneumatic Supply System, Emergency Recharging	IV-B-7-3
Program Planning Networks, Task Item 1.7 - Pneumatic Supply System	IV-B-7-4
Pneumatic Supply System Schedules and Milestones	IV-B-7-5
Program Planning Network, Task Item 1.8 - Tank Pressurization System	IV-B-8-1
Pressurization System Schedules and Milestones	IV-B-8-2
Engine Test Setup in CITS Facility	IV-B-9-1
Tank Heating Experiment in CITS Facility	IV-B-9-2
Program Planning Network, Task Item 1.9 - CITS	IV-B-9-3

CONTENTS (cont.)

	Figure
Aerojet Approach to Ground Support Equipment Systems Engineering	IV-C-1-1
NERVA Operational Flow Diagram	IV-C-1-2
Preliminary Arrangement, E-MAD Floor Plan, Equipment Locations	IV-C-1-3
Functional Operations and Associated Equipment Locations Diagram, Remote Handling Equipment	IV-C-1-4
Preliminary Equipment List and Schedules, Remote Handling and Transportation	IV-C-1-5
Functional Operations and Associated Equipment Locations Diagram, Checkout and Test Support Equipment	IV-C-1-6
Preliminary Equipment List and Schedules, Checkout and Test Support	IV-C-1-7
Functional Operations and Associated Equipment Locations Diagram, Ground Handling Equipment	IV-C-1-8
Preliminary Equipment List and Schedules, Ground Handling and Transportation	IV-C-1-9
Diagnostic Instrumentation Schedules and Milestones	IV-C-2-1
Program Planning Network, Task Item 2.4 - Diagnostic Instrumentation	IV-C-2-2
Component/Subassembly Test Schedule, Diagnostic Instrumentation (Task Item 2.4)	IV-C-2-3
Dependency of Payload on Third-Stage Burning Time	IV-C-3-1
Effect of Thrust Level and Specific Impulse of NERVA Engine on Payload to Escape	IV-C-3-2
Reliability Functional Block Diagram, NERVA Engine	IV-C-4-1
Modes of Failure Analysis	IV-C-4-2
NNRDC Facilities Use Schedules and Milestones	IV-D-1-1
NNRDC Facilities Schedules and Milestones	IV-D-1-2

CONTENTS (cont.)

	Figure
Engine Test Stand No. 1	IV-D-2-1
Conceptual Layout for Component Irradiation Test System Facility (ETS-1 Installation)	IV-D-6-1
Test Stands C-4, C-5, C-6	IV-F-1
Test Stands H-4, H-5, H-6	IV-F-2
LH_2 Run Vessel	IV-F-3
LH_2 Catch Vessel	IV-F-4
Flow Diagram, Test Stands H-4, H-5, H-6	IV-F-5
Flow Diagram (Deluge System), Test Stands H-4, H-5, H-6	IV-F-6
Flow Diagram (Storage and Catch), Test Stands H-5, H-5, H-6	IV-F-7
Calibration and Weight System, LH_2 Run Vessel, Test Stands H-4, H-5, H-6	IV-F-8
Engineering Cryogenics Laboratory, Building 3003, 500-gal LH_2 Run Vessel	IV-F-9
Flow Diagram, Cryogenics Laboratory	IV-F-10
Plot Plan, LRP Cryogenics Laboratory	IV-F-11
Floor Plan and Sections, LRP Cryogenics Laboratory	IV-F-12
Acquisition Capability, Test Stands H-4, H-5, H-6	IV-F-13
Plan, Control Building, Test Stand H-2	IV-F-14
Plot Plan, H-Area Facilities	IV-F-15
LH_2 Storage Vessel	IV-F-16
Analog Computer Facility	IV-F-17

I. OBJECTIVE

The objective of this proposal is to provide the basis upon which the effort currently in progress under Contract SNP-1, for the development of the NERVA nuclear rocket engine and related activity, will be continued for the calendar time period from 11 January 1962 through 30 September 1962.

II. INTRODUCTION

A. PROPOSAL CONTENT

This proposal is divided into two volumes: Volume I contains the description of the overall engine development program and associated tasks through completion of PFRT, in which the overall program through PFRT is defined, the general development approach is delineated, the critical development areas are discussed, and the status of major elements is reviewed. In addition, this volume contains a technical discussion, by engine subsystem, in which the major development areas, restricted to critical subassemblies and components, are defined, the approach to their solution is outlined, and a detailed program plan is presented through June of 1963. The engine developmental support items are discussed in a manner similar to the discussions of the engine subsystems. These items include remote handling and ground support equipment, diagnostic instrumentation, reliability, safety, facilities at NNRDC, STE, management, technical assistance, and liaison. Volume II contains the NERVA Technical Administration Documents, work statements, and cost summary.

In general, the program discussions contained in Volume I describe the technical approach to accomplishment of each of the many tasks with a general objective of qualifying subassemblies and components for flight by the time the engine PFRT is initiated. The period of development at the subassembly and component level through June 1963 is discussed in detail with the specific descriptions of the various work programs proposed for the period 11 January to 30 September 1962 contained in the individual Technical Administration Documents of Volume II.

B. PROGRAM PARTICIPANTS

Aerojet-General and its well-qualified group of subcontractors* propose to conduct the extension to the present SNP-1 contract in accordance with the plans outlined in these volumes. The areas of participation of each associate are itemized in Table II-1. The overall engine development task and associated activities are divided into several areas of responsibility. Aerojet-General is responsible for the complete engine development program as directed by the AEC-NASA Space Nuclear Propulsion Office. This responsibility is carried by the NERVA Operations Office (NOO) at the Azusa Plant. This organization has a continuing technical management function for all aspects of the program. Aerojet's

*Astronuclear Laboratory, Westinghouse Electric Corporation; Research Laboratories Division, Bendix Aviation Corporation, AMF Atomics, American Machine and Foundry Company; Edgerton, Germeshausen, and Grier, Inc.

II Introduction, B (cont.)

Liquid Rocket Plant at Sacramento is active in the development of engine components and subassemblies excluding the reactor subassembly. Aerojet's principal subcontractor, the Astronuclear Laboratory of the Westinghouse Electric Corporation, has responsibility for the reactor subassembly development and associated tasks. The Research Laboratories Division of the Bendix Aviation Corporation is supporting the program in the area of control system components. AMF Atomics of the American Machine and Foundry Company provides the remote handling capability required to support the test program. Edgerton, Germeshausen, and Grier, Inc., are supplying support largely in the area of test-stand instrumentation criteria preparation, design, procurement, and installation.

TABLE II-1

NERVA ENGINE DEVELOPMENT PARTICIPANTS

Contract Task Item No.	Description	Aerojet-General NOO	Aerojet-General LRP	Westinghouse	Bendix	AMF	EGG
1.1	Engine System	X	X	-	-	-	-
1.2	Prop. Feed System	X	X	-	-	-	-
1.3	Reactor Subassembly	X	X	X	-	-	-
1.4	Thrust Chamber Assy.	X	X	-	-	-	-
1 5	Engine Controls	X	X	-	X	-	X
1.6	Destruct System	X	-	X	-	-	-
1 7	Pneumatic Power Supply	X	-	-	-	-	-
1.8	Pressurization System	X	-	-	-	-	-
1 9	Component Irradiation Test	X	X	X	-	-	-
2.1	Remote Handling	X	X	X	-	X	-
2 2	GSE Checkout & Test	X	X	X	-	-	-
2.3	GSE Logistics, Handling & Maintenance	X	X	X	-	-	-
2.4	Diagnostic Instrumentation	X	X	X	-	-	X
2.5	Field Support	X	-	X	-	-	-
2.6	Reliability	X	X	X	X	X	X
2.7	Safety	X	-	X	-	-	-
2.8	Training	X	X	X	-	-	-
2.9	LASL Support	X	-	X	-	-	-
3.1	NNRDC Master Planning	X	-	X	-	-	-
3.2	ETS-1	X	-	X	-	-	X
3.3	ETS-2	X	X	X	-	-	-
3.4	E-MAD	X	-	X	-	X	-
3.5	Reactor Devel. Stand	X	X	X	-	-	X
3.6	Comp. Irrad. Test System	X	X	X	-	-	-
4.1	PERT (NARMS)	X	X	X	X	X	X
4.2	Fiscal Reports Mgmt.	X	X	X	X	X	X

Table II-1 (cont.)

Contract Task Item No.	Description	Aerojet-General NOO	Aerojet-General LRP	Westinghouse	Bendix	AMF	EGG
4.3	Tech Reports & Documents	X	X	X	X	X	X
4.4	Data System	X	-	-	-	-	-
5.1	STE-LRP - C Area	-	X	-	-	-	-
5.2	STE-LRP Cryogenic Lab.	-	X	-	-	-	-
5.3	STE-LRP - H Area	-	X	-	-	-	-
5.4	STE-Azusa	X	-	-	-	-	-
5.5	ANL	-	-	X	-	-	-

III. DESCRIPTION OF NERVA ENGINE DEVELOPMENT PROGRAM AND ASSOCIATED TASKS

A. PROGRAM DEFINITION

The total task of the NERVA engine development and its associated activities is a continuous one which, started in July 1961, will continue through the completion of Preliminary Flight Rating Test (PFRT), culminating in a first flight test of a PFRT-configuration engine in the RIFT vehicle in the third quarter of 1966.

To provide a detailed description of the initial phase of the Contract SNP-1 extension (for the period ending 30 September 1962), it is first necessary to examine the overall engine development task and associated activities so that the initial efforts can be placed in the proper perspective and correctly oriented and directed. This overall program planning activity is a required work task of the present contract to be completed in January 1962, and would normally be reported in the final summary technical report covering the period ending 10 January 1962. However, for the purposes of this proposal, it has been necessary to provide an earlier, preliminary definition of the overall program.

1. Ground Rules

a. Established by SNPO

The development of the NERVA nuclear rocket engine is paced by several very important ground rules laid down by the Space Nuclear Propulsion Office. The most important of these for programming purposes are

(1) The reactor to be employed in the NERVA engine shall be one based on the LASL Kiwi B design.

(2) The selection of one of several core designs currently under test by LASL for the NERVA reactor will be made in July 1962.

(3) No extensive hardware research and development activity will be initiated until after a successful test of a Kiwi reactor with liquid hydrogen is performed.

b. Recommended by Contractor

It is important to the planning of the NERVA project that the stipulation regarding the selection of the core for NERVA should be reviewed in greater detail. The state of development of the reactor on the date of

selection is critical. To date, it is believed there has been no specification stated as to what can be expected. After review of the needs of the development program, the following recommendations are proposed for adoption as the selection criteria for the reactor:

(1) Tentative Selection

A tentative reactor selection for the NERVA engine would be made following the operation of the B-1, B-2, and B-4 Kiwi reactor designs using liquid hydrogen as the propellant feed. The reactor would be required to operate for a single, full-power, 300-sec cycle at full rated propellant core exit temperature. Each reactor that passes this requirement will be considered a candidate for tentative selection. Criteria for success in this test are as follows:

(a) There has been no catastrophic failure of the reactor; that is, no excursion, loss of reactivity by loss of core parts, or serious erosion in the core.

(b) Mechanical damage in post-operative inspection is minor and can be analyzed and understood, and corrective action can be specified.

(c) The reactor has operated satisfactorily under test in terms of observable data.

The LASL schedule is set to complete by July 1962 the testing of at least one of each of the three core designs. If any of the core candidates has passed the above criteria, a tentative selection can be made.

(2) Selection for Development

The reactor selected as the tentative choice would then be required to pass additional verification tests, and this verification would require two additional reactors for test. In one of these tests the reactor would be required to operate a minimum of two full-power cycles at full rated propellant outlet temperature with complete shutdown between cycles. In the second test utilizing the second reactor, the reactor would be required to pass certain transient tests including several relatively rapid start-ups, transient operation in the power range followed by scram shutdown. Satisfactory completion of these tests would be judged on the same criteria as for the tentative selection. Should the tentative reactor choice pass these verification tests, it would be selected as the reactor for development for the flight engine.

If the above recommendations are accepted, the NERVA program can be logically planned to achieve the overall objective.

2. Development Approach

The approach taken to the development of an engine system is, among other things, strongly influenced by the time available for such development. For the NERVA nuclear rocket engine, this available development period can be specified fairly definitely. Based upon considerations of its role as a high-performance upper stage and upon the stated objectives of the first flight (which is to be a demonstration of feasibility for both engine and vehicle), schedule availability times emerge quite readily. Further, the NERVA engine thrust and performance is governed by the requirement that it incorporate a reactor of the Kiwi type, so that, contrary to usual practice, only limited stage optimization effort is necessary or required. Similarly, only limited flexibility can be expected with regard to booster stage or stages, and it is logical to use the first booster system to be developed which even closely approaches an optimum vehicle system. Considering the development cycle of the Saturn vehicles (which will be used for the RIFT flight tests), and making suitable allowances for RIFT vehicle integration and the activation of assembly, test, and launch facilities, it appears that a first flight test is feasible during the third quarter of 1966, and the development schedule is postulated accordingly. It is evident that some program acceleration could be effected, but details of the acceleration can be indicated only after close examination of test facility construction and availability schedules, booster system availability dates, and overall vehicle system engineering and integration milestones. With this target date specified, it remains necessary to define an engine system development program whose goal is the provision of a PFRT-configuration NERVA engine for this first flight test.

The development of the NERVA nuclear rocket engine resembles in many ways the normal development of the cryogenic-liquid-propellant rocket engine in that components for very-low-temperature service are required. However, the NERVA engine presents problems not normally encountered in chemical rocketry. These are the development of the nuclear reactor and the necessity to provide hardware components that must withstand the high-flux neutron and gamma radiation that surrounds the reactor when in operation as well as the cryogenic environment. These two factors constitute the major technical hurdles that must be crossed to achieve success, and therefore the approach to engine development must account heavily for the solution of these problems.

There are two basic approaches which may be followed in the development of the NERVA engine. The first embodies the immediate and concurrent development of all engine component subassemblies on the basis of

present and, in some instances, limited knowledge. This approach generally results in the early testing of the complete assembly so that system problems are detected early in the program.

The second approach delays complete-engine testing until extensive research and development of the critical components and subassemblies have been completed. As the problems are defined and their solutions delineated in these critical areas, the development of the remaining engine components is initiated and the program may then be accelerated to engine testing.

Each of the two methods possesses advantages and disadvantages. The concurrent-component-development approach leads to early engine system test, albeit with a certain risk that engine failure may occur. Past experience has shown that component development tests do not always reveal design deficiencies and that such problems very often occur in a completely assembled system due to interactions between components and their connections. Therefore, early recognition of this type of difficulty ascertained by system test is both necessary and desirable, since a greater amount of development time to correct these discrepancies can be obtained. This development approach also has an unprecedented history of success, since practically all of the operational rocket engines in existence today were developed according to this procedure. This approach does, however, require a high initial rate of expenditure early in the development program and an early commitment of a significant amount of R & D hardware. The latter factor violates the SNPO ground rules.

By the same token, extensive R & D on individual components, prior to engine assembly and test, delays recognition of system problems until late in the program. This constitutes a risk in case serious difficulties are encountered in system test. On the other hand, because of the nature of the nuclear reactor and the expensive and consequently limited facilities available for test, an engine failure leading to destructive failure of the reactor is both costly and time-consuming. Since the Kiwi reactor has not yet been tested with liquid hydrogen, and since the NERVA engine development depends on the demonstration of this key milestone, the latter development approach is the logical choice to pursue in the initial period of the program to minimize financial risk and is the one chosen for development of the NERVA engine.

3. NERVA Development Program Plan

In keeping with the discussion above, the program plan proposed for the NERVA engine is characterized by separate and concurrent development of the NERVA reactor subassembly and the non-radiative components that make up the various systems comprising the engine. The general development path

consists of testing individual components to demonstrate their capability to operate in all expected environments including nuclear radiation, incorporating these components into major subsystems and performing development testing of the major subsystems. Final system integration is accomplished after the reactor subassembly and other subsystems have been extensively tested under the anticipated radiation environmental conditions. The NERVA engine requires that certain of the components perform their function in a combination of environments complicated by the radiation and cryogenic aspects of the problem. In view of these considerations, considerable effort is devoted to the accomplishment of radiation-effects test programs. Plans have been made to perform some preliminary screening tests side-by-side with the scheduled Kiwi test series; in-pile tests of candidate materials are scheduled; and an extensive series of investigations is planned in a Components Irradiation Test System described in Section IV, B, 9. Extensive use is made of simulation devices during the test programs planned for the engine components and subassemblies, so that realistic environments, as well as interactions, can be provided.

To provide a common basis for the program discussions following, it is worthwhile at this point to review briefly the NERVA FX-engine. As shown by Figure III-A-1, the NERVA engine is a fully gimbaled, monopropellant, nuclear-powered rocket engine. The fluid in the engine is hydrogen, which is used by the thrust-vector and roll-control actuators, the reactor control-drum actuators, and all valve actuators, as well as for tank pressurization and for the production of the engine thrust. No organic materials are used in the engine.

The main propellant shutoff valve is located in the bottom of the propellant tank to minimize pressure drops in the pump suction line, and to eliminate all requirements for positive static seals in the turbopump assembly. A bypass around this valve, monitored by an electrically controlled valve, provides the low flow rates needed in final cooldown of the reactor following a power run. The pump suction line runs from this valve complex down around the gimbal to the turbopump assembly, which is mounted in the thrust structure above the pressure vessel. In this way, the propellant provides adequate cooling for the large metal masses involved in the gimbal assembly, without creating a significant temperature rise in the fluid.

The pump is located on the gimbaled portion of the engine, to eliminate the necessity of routing the high-pressure pump discharge and turbine feed lines across the gimbal. The turbopump is a single-stage mixed-flow (centrifugal with axial inducer) pump, and is capable of an extremely wide range of operation, ranging from a few pounds per second to more than 90 lb/sec. The pump is overhung on one end of a short shaft, on the other end of which the turbine is overhung, using hydrogen for cooling and lubrication of the bearings.

Two cycles are still considered for construction of the FX-engine: the heated-bleed cycle and the hot-gas-bleed cycle. The engine shown in Figure III-A-1 is the heated-bleed cycle. The differences between the two lie in the design for the turbopump, the plumbing leading from the bottom of the reactor to the turbopump, and the design of the nozzle skirt. In the hot-gas-bleed engine, the nozzle beyond area ratio 9:1 is uncooled, whereas in the heated-bleed version, the nozzle beyond area ratio 4:1 is hydrogen-cooled to provide energy for driving the turbine. The pump discharge is ducted to the main nozzle to provide cooling, entering the jacket at the point where the nozzle area ratio is 4:1. The flow then moves toward the throat, up along the convergent section of the nozzle to the reactor reflector, through the reflector, and into the reactor inlet plenum. Part of the flow is then diverted through the shield, which is located immediately above the core. The bulk of this bleed flow is then ducted down to the nozzle, entering at the point where the nozzle area ratio is 9:1, flowing out to the nozzle exit plane, and returning to the 4:1-area-ratio point, where it is collected by a manifold. This gas is then used to drive the turbine and is exhausted overboard through nozzles for residual thrust recovery. These nozzles are rotated to provide roll-control torque for the vehicle.

The designation, "heated-bleed cycle," is derived from the preheating of the hydrogen provided by the shield and nozzle after the fluid is bled from the reactor plenum. The remainder of the flow passing through the shield is again divided, one part going to the various pneumatic actuators and the remainder going to the propellant tank to maintain the tank pressure.

The nozzle utilizes the conventional tubular construction. Due to the large contraction ratio of the nozzle, longitudinal loads (which are carried by the tubes in chemical rocket engines) are very high, and a supporting shell must be provided around the tube bundle. Care is exercised to insure good thermal contact of the shell with the tubes, to prevent shell overheating from the radiation field of the reactor. Special cooling circuits are provided for all material not in intimate contact with the main propellant flow and through all thick sections, such as the flange at the junction between the nozzle and the reactor pressure vessel. Current indications are that only those structures below the gimbal will require cooling fluids, unless very thick sections become involved.

The reactor assembly for the NERVA engine is a solid-core graphite assembly based on Kiwi-B design concepts. As shown in Figure III-A-1, it consists of a homogeneous uranium oxide-fueled core, 36 in. in diameter and 52 in. long, surrounded by a cylindrical beryllium reflector assembly of 5-in. radial thickness. Twelve reactor control drums located in the reflector

assembly each rotate a "poisoned" surface in or out for criticality control. Between the cylindrical beryllium reflector and the high-temperature core is a 2-in. radial thickness of graphite reflector, which also serves as a thermal barrier. The individual fuel elements containing the coolant flow passages (metal carbide-coated holes) are encased in unfueled graphite modules for support. Each module has 7 holes, approximately 3/4 in. in diameter, in a triangular array in which the fuel elements are stacked. Each module is secured to the top support plate by a special hollow stud. The aluminum top support plate is perforated with holes to permit coolant flow to each fuel element. The top support plate is connected to the pressure vessel through a thin steel cylindrical shell which passes down through the cylindrical graphite reflector to the pressure vessel-nozzle joint closure. Above the top support plate there is mounted a 10-in.-thick, 50-in.-dia, shadow-shield assembly. This shield assembly is comprised of approximately 1/2-in.-dia, 18-in.-long, thin-wall tubes filled with lithium hydride pellets. The tubes each have welded-in plugs, with turned-down ends to fit through holes in the shield top and bottom closures, which are joined at the periphery to form an assembly. The shield and reflector are structurally secured to the pressure vessel at the top flange joint. The reactor control-drum drive shafts (12) pass through the shield and pressure vessel to the pneumatic control activators which are flange-mounted to the outside of the pressure-vessel head closure.

The program plans discussed in the following sections were formulated around the technical tasks required to develop this engine.

Reference is made to Figure III-A-2, which is an abbreviated summary program chart showing projected facility availability and test schedules, and to Figure III-A-3, which is a key milestone summary.

These charts show that, as a result of the five Kiwi tests scheduled from February to June 1962, reactor design is to be tentatively selected in July 1962, and that final selection for development will be made in November 1962. Fabrication will then be initiated for the NRX series of reactor development tests, which will start in August 1963, probably utilizing NNRDC Test Cell "A."

An initial NERVA reactor test, primarily to test shield concepts, is suggested for January 1963, as an extension of the Kiwi test series. For this particular test, it is assumed that the test configuration will be procured by LASL, and the tests will be managed and conducted by LASL personnel. A total of four NRX configurations are planned to support the initial development of the flight-engine configuration. An additional three may be required to reflect either subsystem improvements for subsequent availability or necessary continuations and refinements in development testing of the selected flight design.

The Component Irradiation Test System (CITS) is planned to start early in the program and is scheduled for Test Stand ETS-1, which is available for beneficial occupancy in December 1962 and will be fully activated in February 1963. It is assumed that the CITS tests will start in June 1963 and will continue beyond June 1964. Because of this contingency, Test Stand ETS-1 is reserved for CITS testing exclusively, although it could be readily adapted to accommodate engine testing if additional component radiation tests should not be required. Some initial radiation effects testing of a screening nature can be conducted side-by-side with the planned Kiwi-series tests, and it is anticipated that some limited testing can occur as early as March 1962, for those components or elements that will be available.

It is seen that the first development NERVA engine test is scheduled for the first quarter of 1964, or slightly over 2 years prior to first flight. This selection is in keeping with the general approach as outlined previously and allows 6 to 9 months of radiation testing, of a confirmatory nature, of engine components as well as several NRX reactor tests, prior to engine test.

The development series of engines, the E series, are divided (for procurement purposes) into five blocks prior to PFRT, each block reflecting a refinement in configuration and development for which a design freeze is imposed. The design freeze date in all cases is intended to indicate that the freeze applies only to the design of the longest-lead component or subassembly. There is a great amount of flexibility in making changes to other components or subassemblies after the indicated freeze dates. For each engine block of the program, the design freeze is indicated as being 10 months prior to the first test in that particular series.

Since the components comprising the engine will have completed a significant number of component development tests, the first E-engine (E-1) can be expected to achieve full power conditions, and the goal is to accumulate 30 min of test, part of which will be at full power. After a thorough post-mortem examination of subassemblies and components, it is appropriate to start testing of the E-2 engine with most of the tests at full power. It is to be pointed out that it could be possible to incorporate changes into the E-2 engine reactor if the results of the NRX-1 tests make it desirable. It is planned that two engine test stands be available for development engine testing and that these same stands will be used for the PFRT and Qualification Tests. These stands are described in Section IV, D of this volume.

A dummy-engine flight-test program is suggested, using two engines of the DFX series, to be scheduled for flight during the second and third quarters of 1965. The purpose of these tests is to provide an opportunity to

obtain actual flight environmental data for the engine, particularly during the boost phase when the reactor will undergo the most severe structural loading conditions. It is expected that any significant results of these tests may indicate some configuration changes that should be incorporated into the PFRT program. No special assembly facilities are needed at the launch site for the dummy flight tests; no radiation difficulties can occur, and so an existing hangar can be used for pre-flight assembly and checkout purposes.

The PFRT program will be completed prior to flight, and this four-engine test series is shown as starting during the third quarter of 1965. Three GVX engines will be provided to the vehicle contractor late in 1964. It is evident that some additional test facilities will be required at NNRDC, but the vehicle test stand (VTS-1) cannot be defined at this time.

Between the completion of PFRT in the first quarter of 1966 and the start of qualification testing, an additional block of E-engines is scheduled for testing as preparation for the qualification test program, which will be based on all preceding testing, but particularly on the PFRT.

The RIFT flight-test program is assumed to consist of three flights, and the corresponding NERVA engines are designated as the FX series. Special assembly facilities will be required at the launch site in support of these tests. The preliminary criteria for the launch-site assembly facility will be established early in 1962, and facility design is scheduled for completion in January 1963.

Full engine qualification testing is scheduled to start in the second quarter of 1967, and will be completed in the third quarter of the same year. Four Q-series qualification-test engines are provided.

Development-test schedule details are shown in Figure III-A-4 and the facility milestones are indicated in Figure III-A-5. Based upon a consideration of test schedules and facility milestones, it is obvious that facilities and their availability are critical and significant aspects of the overall development program. Considering normal lead times for these facilities, the test and flight schedules are possible only if the facilities can in fact be made available when needed. Any delay in the making of decisions or in the initiation of construction by facility contractors could delay the overall program.

It is planned that two engine test stands will be available for the development engine testing, and that these stands will be used for PFRT and for the qualification-test program. The GVX engines will be tested as part of the complete stage in a vehicle test stand, the criteria for which can be specified

only after the stage contractor is selected. The CITS (Component Irradiation Test System) tests are planned for Test Stand ETS-1. It is, therefore, assumed that the ETS-1 stand will not be available for engine testing; however, if the CITS program can be terminated earlier than presently anticipated, this stand can be subsequently refitting for engine test purposes early in 1965.

It is expected that Test Stand ETS-1 will be available for beneficial occupancy on 15 December 1962, Test Stand ETS-2, in the second quarter of 1963; and Test Stand ETS-3, in the second quarter of 1964 (see Section IV, D). The E-MAD facility, equipped with hot, cold, and satellite cells, will be available for beneficial occupancy in the third quarter of 1963; the existing MAD building will be used on a shared basis with LASL personnel to accommodate the NERVA NRX-1 and CITS test programs occurring prior to E-MAD activation.

The significant milestones in the development plan are reactor selection dates, the initiation of the Component Irradiation Tests, the NRX reactor test series, and the first nuclear engine test. Figure III-A-6 is a program planning master network which shows the interrelation of these events and how the technical data obtained are utilized to accomplish the program objectives.

4. Program Summary, 11 January 1962 through 30 June 1963

The proposed program for the SNP-1 extension is planned to most economically achieve the expeditious development of critical components within the limiting ground rule established by SNPO that hardware commitments be held to an absolute minimum pending successful Kiwi-B liquid-hydrogen tests. To keep expenditures for the SNP-1 extension within the limitations, hardware fabrication and testing during the 9-month period from 11 January through 30 September 1962 has been limited to those items which are deemed critical.

Components falling into the critical category must satisfy either or both of the following conditions:

E-engine components which must have demonstrated combined nuclear-cryogenic environmental capability by the time E-1 engine tests are initiated.

Long-development-lead-time engine components, the development of which must be initiated before September 1962 to meet the E-1 test schedule commitments.

Although it has been repeatedly demonstrated in the development cycle of purely chemical rocketry that earliest accomplishment of complete-system tests avoids many component interaction problem areas, still, because

of the development status of the reactor assembly, previously discussed, and the unknown effects of radiation on engine components, the concurrent development of the non-radiating engine components and of the reactor is scheduled for separate facilities. The program has been planned to provide adequate testing and data feedback and exchange between the development programs. The major efforts of this program fall into the following categories:

a. Development of non-radiation-producing components and subassemblies

b. Development of reactor

c. Irradiation testing of materials, components, subassemblies in side-by-side tests, in-pile testing, and Component Irradiation Test System (CITS).

Development effort in the absence of irradiation will be concerned primarily with demonstrating the functional reliability of the components and/or subsystems for operation in the non-nuclear environment, so that, in subsequent testing in the nuclear environment, the effects of irradiation may be recognized. To aid in assuring environmental compatibility of the nuclear and non-nuclear producing systems, it is planned to conduct early limited side-by-side tests in conjunction with the Kiwi test program and in-pile tests at Plum Brook or other in-pile facilities.

Serious limitations are inherent in both the Kiwi-B and the in-pile systems. After the early Kiwi-B tests, the full power level will be achieved, and the dosage rate will approximate that of the NERVA engine. However, due to experiment location relative to the radiation source and the shorter duration of the tests, it is felt that NERVA prototype irradiation conditions will not be reached and the side-by-side tests will yield only peripheral information; i.e., the ability of a component to withstand the Kiwi-B nuclear environment will not assure compatibility of that component with the prototype NERVA-engine irradiation environment. Any failures, of course, will be conclusive. Similarly, though prototype NERVA-engine total dosage is achievable in the Plum Brook in-pile facility, the same situation as in the Kiwi-B tests applies regarding dosage rate.

To eliminate the shortcomings of dosage rate and thermal environment associated with the side-by-side and in-pile tests, it is proposed to later conduct a more extensive irradiation program utilizing a Component Irradiation Test System (CITS) to test the components and/or subsystems under prototype NERVA-engine environmental conditions, including irradiation. The

CITS reactor is to be a gas-cooled, low-power system having unshielded neutron and gamma-flux intensities equivalent to the prototype shielded NERVA engine. The functioning of the reactor will be operationally independent of the CITS experimental hardware; that is, it will be open-loop. To simulate shadow effects and facilitate location or hanging of the experiments, the structure supporting the experiments will be identical to the prototype NERVA-engine structure. This assures excellent simulation, and eliminates the necessity of designing and fabricating the complicated jigs and fixtures which would be required to serve as simulated support structure. The reactor itself will be capable of sustained, long-duration operation, independent of experiment life, and will be invaluable from a reliability demonstration viewpoint, since critical component exposure can be prolonged for testing to safety-factor limits considerably in excess of durations to be met under actual flight conditions. For example, the turbopump assembly and associated controls can be run for extended durations independently from the reactor, and shutdown or failure of either element will not disastrously affect the other. In addition, the prototype remote-handling equipment and GSE will serve the CITS facility in the same manner as it will the engine test and maintenance and disassembly facilities. Figure III-A-7 shows the major milestones occurring in the CITS and associated programs.

During the calendar period covered by this section, the principal efforts will be concerned with detailed design of the engine and of its major subassemblies and components, followed by the iterative cycle of component fabrication and test, redesign and modification, and retest where required. The design of the non-nuclear components will take advantage of presently available engineering knowledge concerning nuclear or cryogenic environmental effects, supplemented by in-pile and side-by-side tests. Requirements for test facilities for the overall program will be continuously reviewed, and procurement of required handling equipment and facilities instrumentation and control will commence, consistent with the requirements for CITS testing commencing in June 1963, for NRX reactor development tests in August 1963, and for E-engine testing during the first quarter of 1964. A summary component hardware utilization schedule and testing schedule is presented in Figure III-A-8.

These tests will demonstrate the integrity of the critical components preparatory to the CITS program. Concurrently, effort is directed toward development of a reactor subassembly in preparation for the first test at NTS of a flight-type reactor (NRX-1), in August 1963.

Cold-flow tests of the Generation-II, Model-I simulator will commence in April 1962, and continue through August 1962, to yield engineering data which will lead to the Model-II simulator tests occurring during October

1962 through February 1963. The Model-I simulator system will have no nozzle or skirt, and will define such engine transient parameters as pump NPSP effects, heat transfer from the reflector and shield, the pressure head potential for turbine power from the tank for pump start-up, and control system and propellant-feed system operational parameters under full-power design conditions (back pressure being supplied by a load valve the control of which depends on engine-control-system signals), as well as component interaction data. The Model-II system will contain a NERVA expansion nozzle and skirt, and will extend the Model-I data to include coolant jacket and expansion nozzle effects. Data acquisition from these transient cold-flow simulator tests will be complete in time to supplement and feed back experience and information useful for the design of a steady-state simulator system.

The analysis and conceptual designs of the steady-state simulator NERVA Engine Test Systems (NETS) will be completed by April 1962, and the detail design and engineering drawings will be completed and released by July 1962. A lead time of approximately 8 months for fabrication and assembly is required before testing can begin. Based upon a decision to proceed with component fabrication in July, full-duration hot testing utilizing the LH_2-LO_2 propellant combination can commence in the first quarter of 1963, provided that the LRP "H" area has been activated. The objective of the NETS system is to provide steady-state design-level operation under virtually prototype thermal and thrust environmental conditions.

Analysis and design of prototype hardware directed toward the E-engine configuration will continue during this period and will result in design definition by 30 September 1962. E-engine design freeze is scheduled for May 1963. Acceptance testing of the Block-1 E-engine components will occur in the fourth quarter of 1963 in the NERVA Engine Acceptance Test System (NEATS). The NEATS system will be similar to the NETS system except that it will employ all deliverable engine hardware, and will be the test system used to perform quality-assurance acceptance tests prior to delivery of the hardware to NTS.

In Section IV, detail test schedules, which include the facility location, accompany the discussion of the development of each component and subassembly at the Liquid Rocket Plant. This information has been consolidated for convenient reference into a test-facility utilization chart and is presented in Figure III-A-9. Major test items are grouped by facility. The bulk of component testing is conducted in the Cryogenics Laboratory which becomes available to the NERVA program early in July 1962. Laboratory testing during the first half of 1962 is conducted in the Controls Laboratory which is adjunct to the Cryolab and is limited to liquid-nitrogen temperatures with very limited liquid-hydrogen capability. Activation of the liquid-hydrogen Cryolab in July greatly

expands the environmental testing capability of the facility as evidenced by the step increase in test activity, particularly in the bearing, seal, and valve area.

For the conduct of the program during the initial funding period through 30 September 1962, it is assumed that certain materials and services will be furnished without cost by the Government. Propellant requirements are shown by month in Table III-A-1. In addition, it is assumed that a Mark XV turbopump built by Rocketdyne will be supplied to permit its evaluation for possible use in the NERVA engine system, if this program is authorized. At the Nevada Test Site, it is expected that office, housing, and transportation will be made available to those participating personnel assigned to the test planning activity of the NASA program.

TABLE III-A-1

ESTIMATED PROPELLANT REQUIREMENTS

MONTH (1962)	OXIDIZER LO_2 (lb)	FUEL		PRESSURANT
		LH_2 (lb)	LN_2 (lb)	H_e (SCF)
Jan	180,000	45,000	69,600	2,800
Feb	270,000	32,100	91,000	2,400
Mar	-0-	24,000	10,000	2,500
Apr	60,000	18,600	21,000	2,500
May	90,000	57,200	77,000	2,100
Jun	110,000	74,000	80,600	2,100
Jul	120,000	69,000	58,600	2,100
Aug	130,000	61,600	59,000	2,100
Sep	210,000	77,000	85,000	2,100

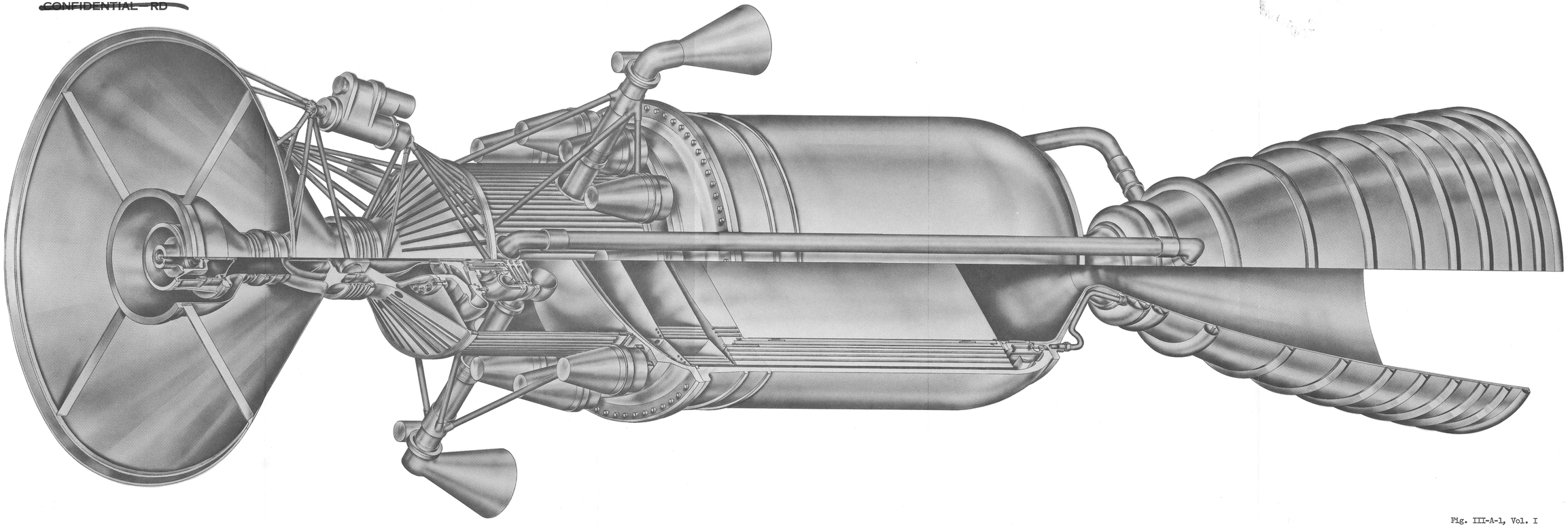

Fig. III-A-1, Vol. I

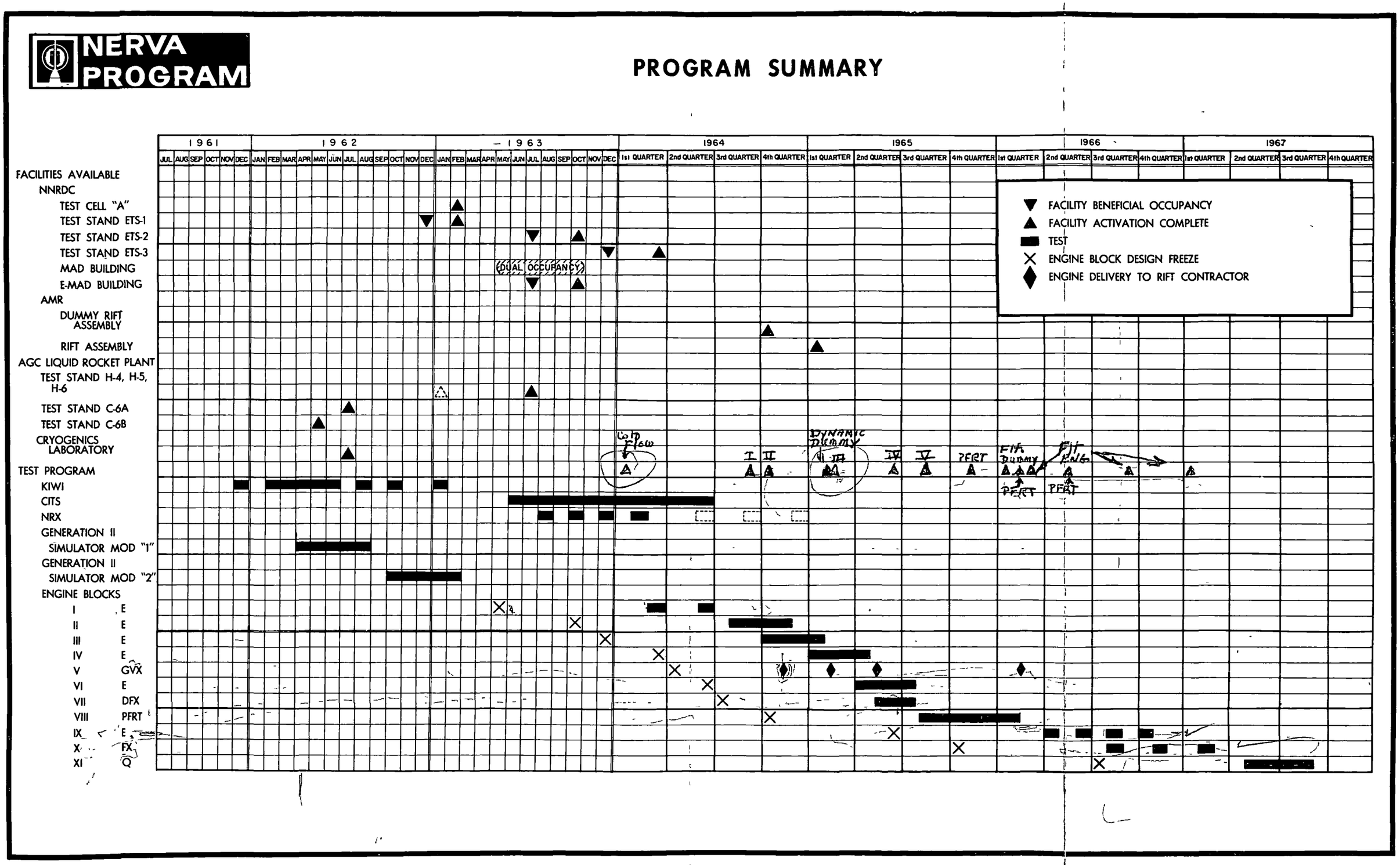

Fig. III-A-2, Vol. I

NERVA PROGRAM

KEY MILESTONES

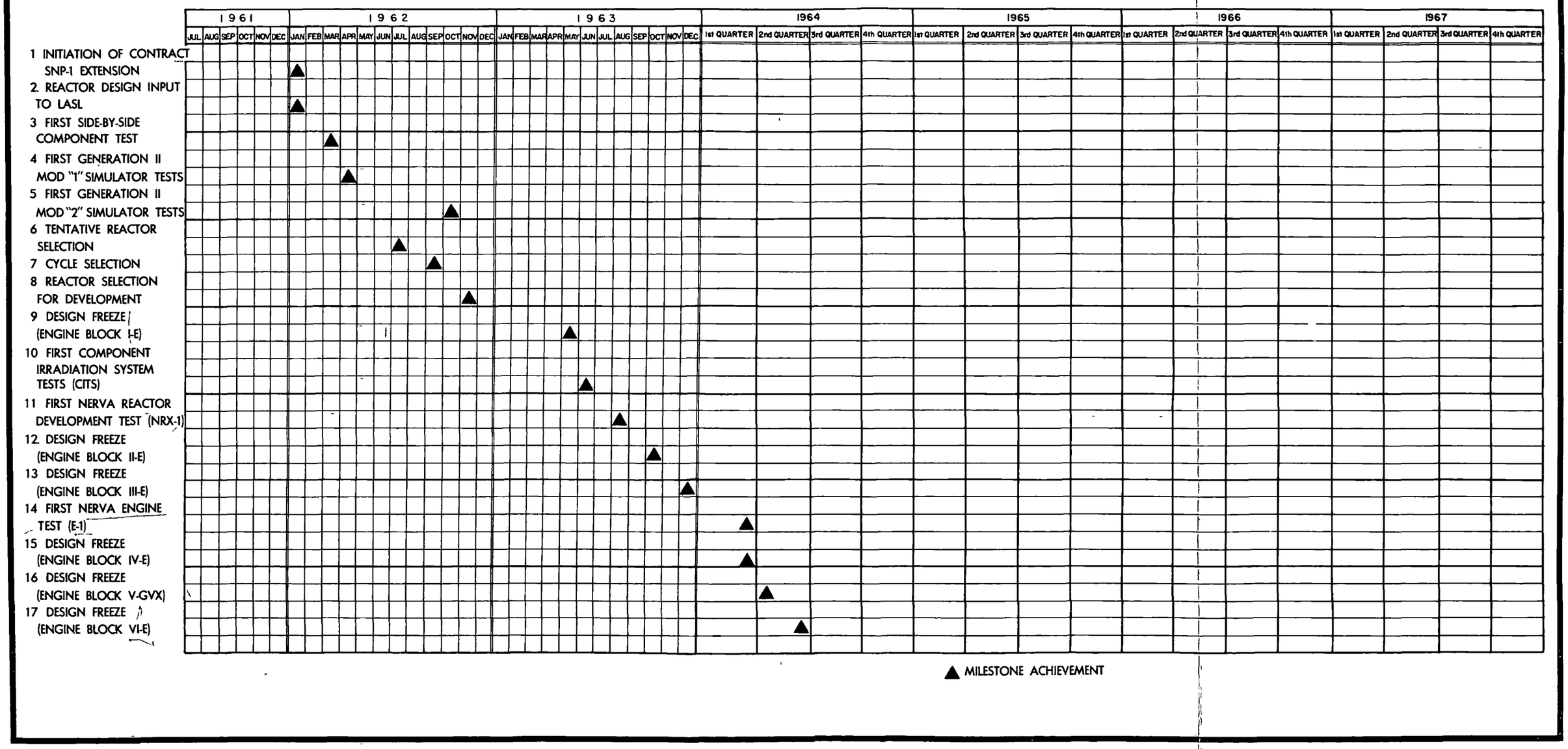

Fig. III-A-3 (Sheet 1), Vol. I

NERVA PROGRAM

KEY MILESTONES CON'T

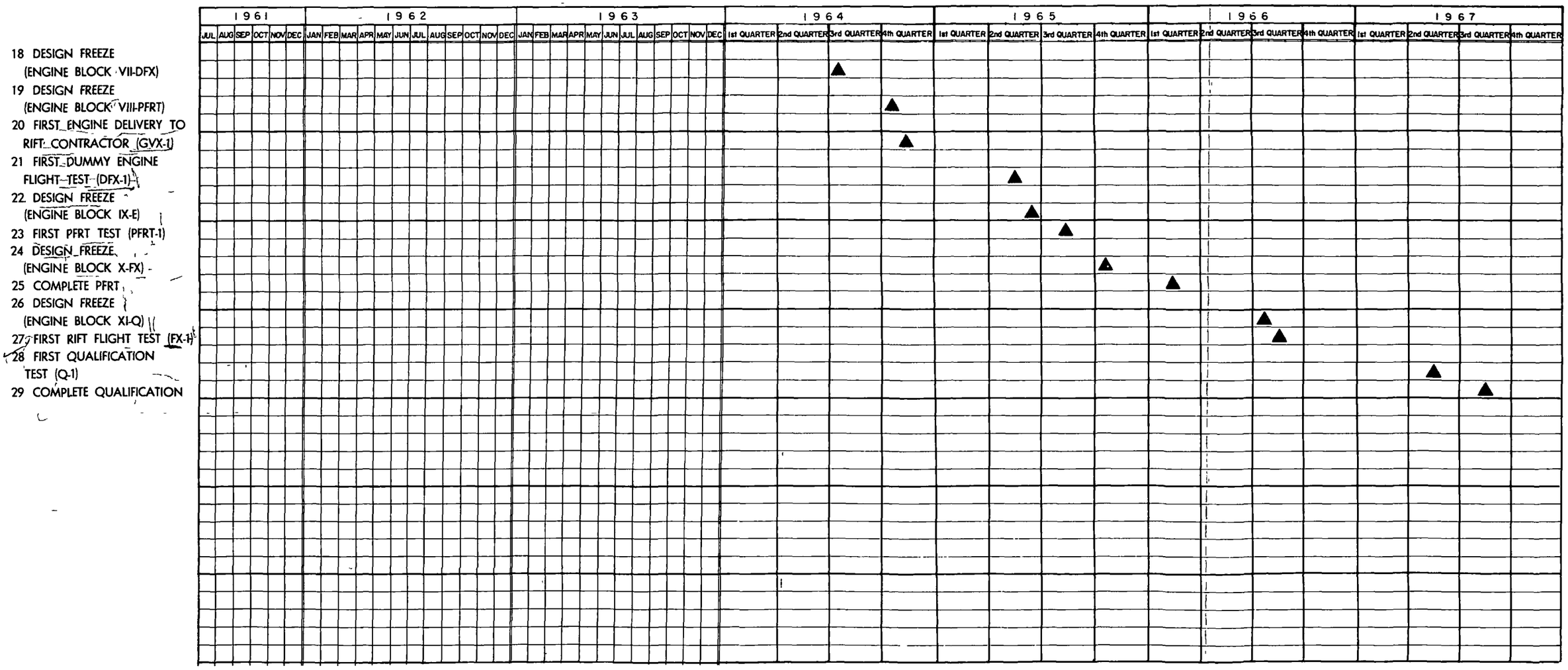

Fig. III-A-3, (Sheet 2), Vol. I

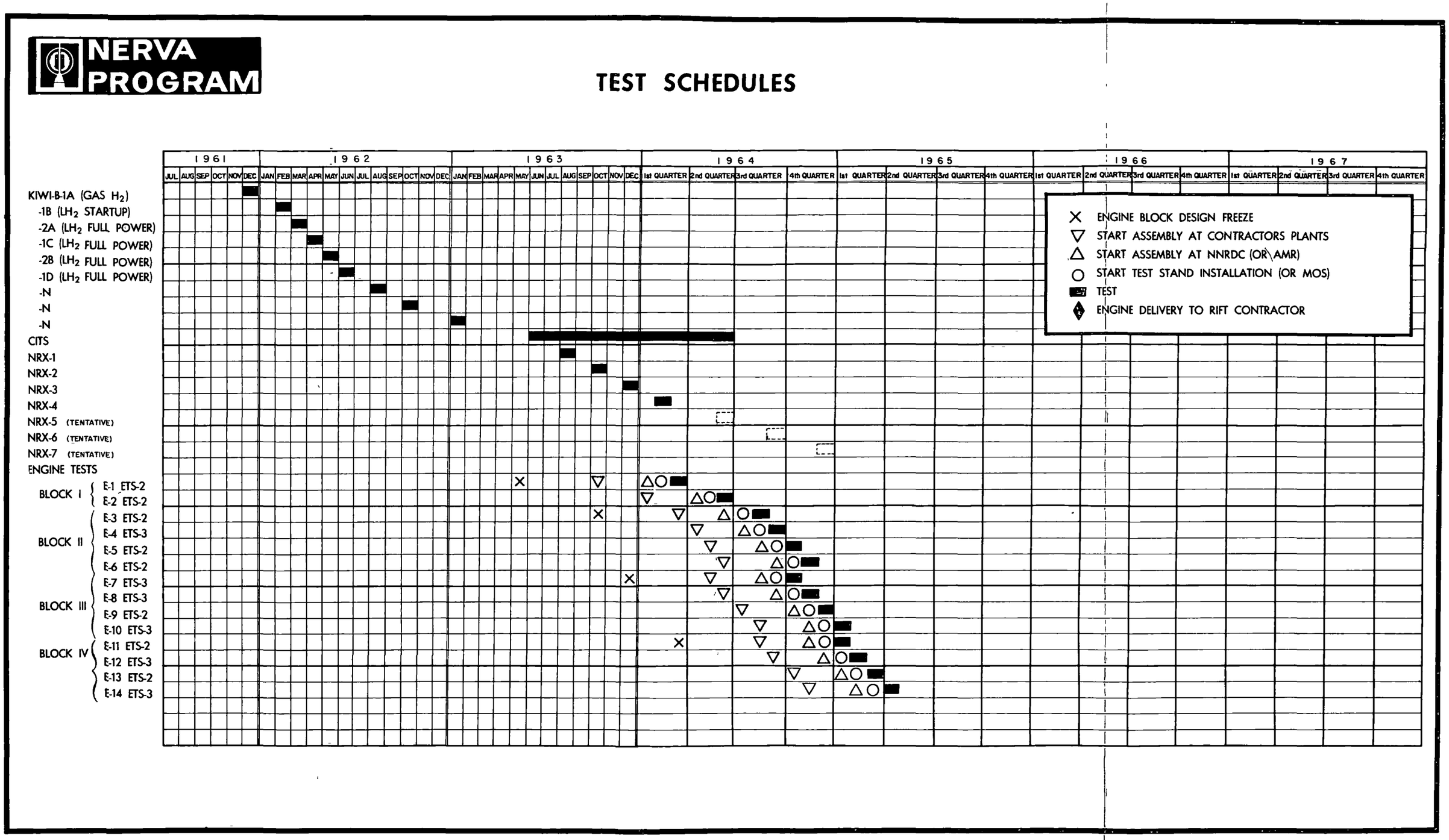

Fig. III-A-4(Sheet 1), Vol. I

NERVA PROGRAM

TEST SCHEDULES CONT'D

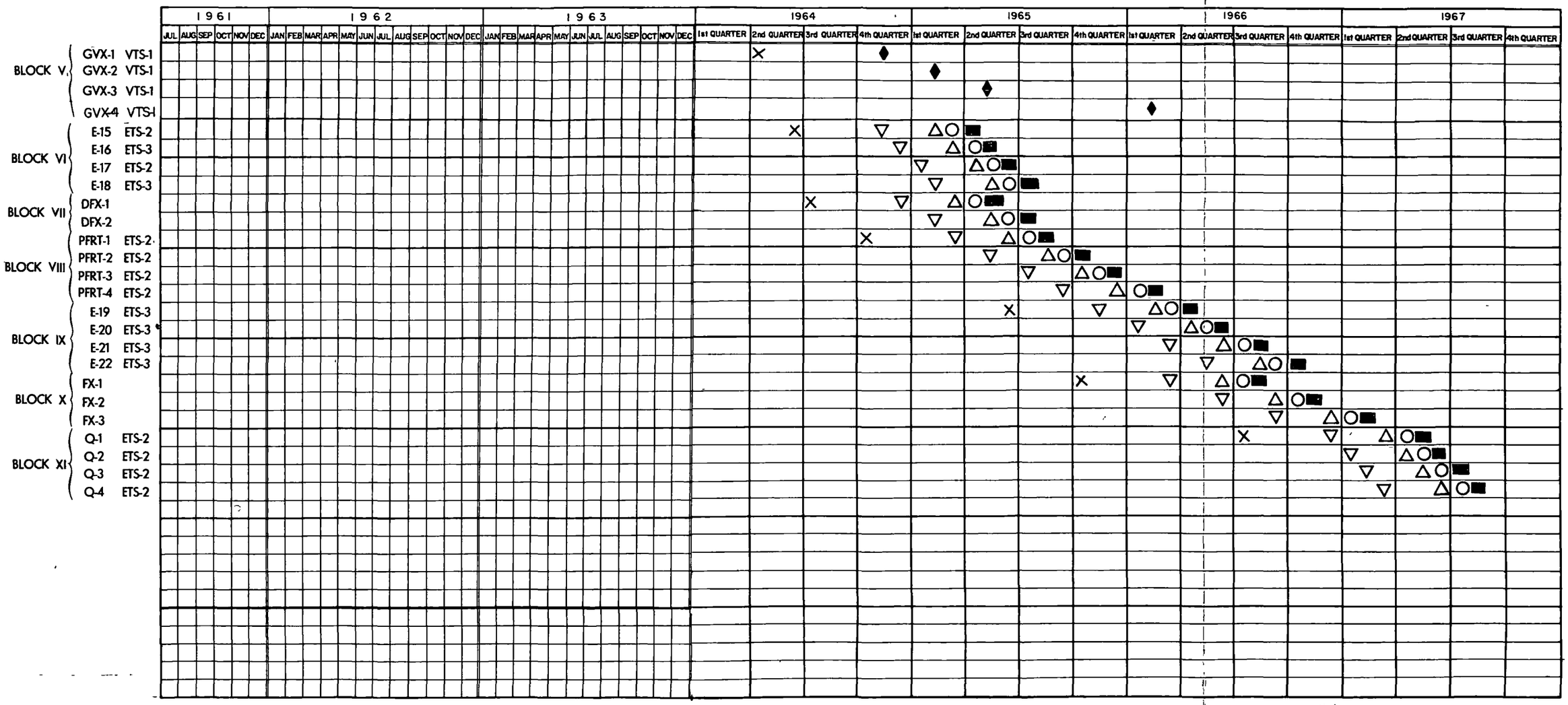

Fig. III-A-4 (Sheet 2), Vol. I

NERVA PROGRAM

FACILITY MILESTONES

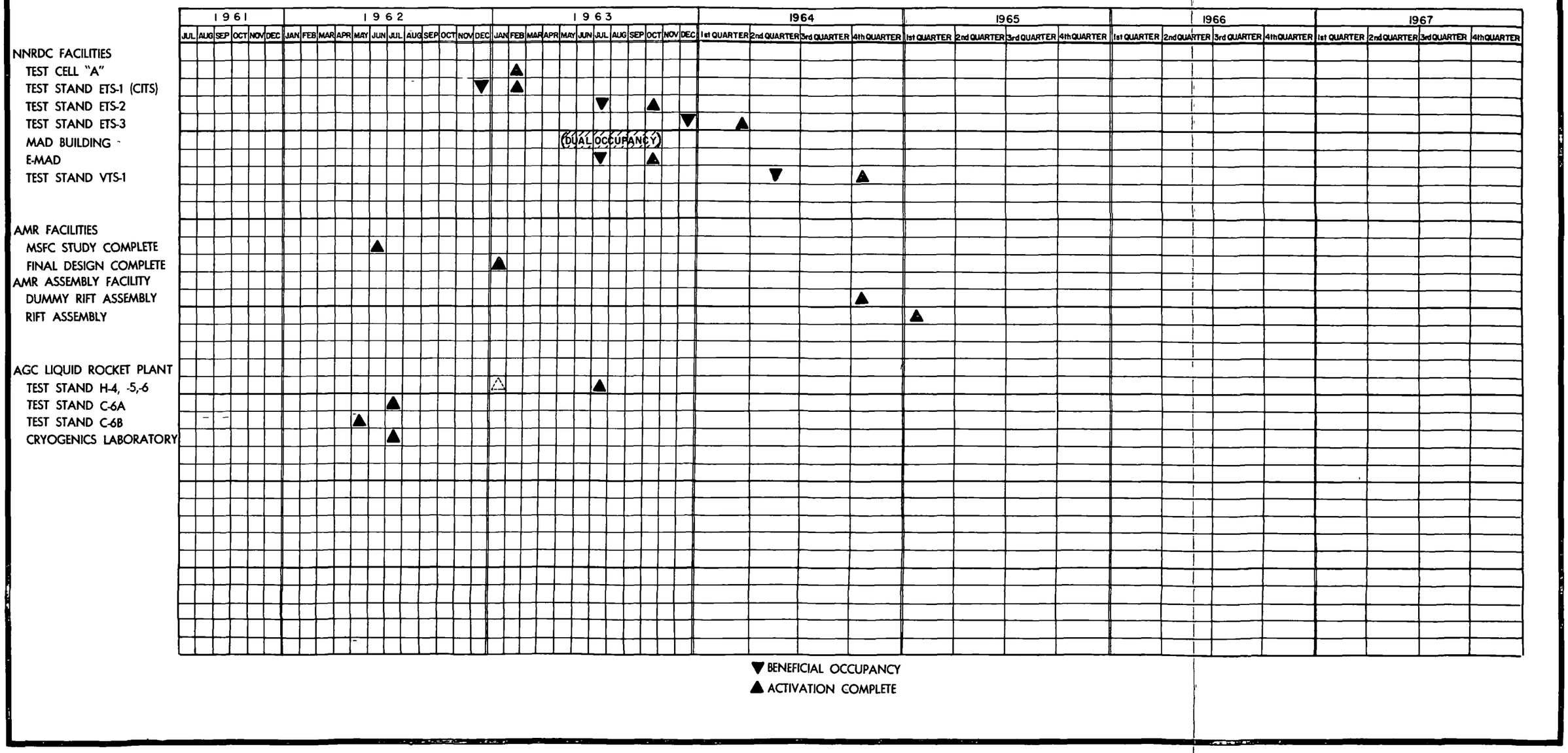

Fig. III-A-5, Vol. I

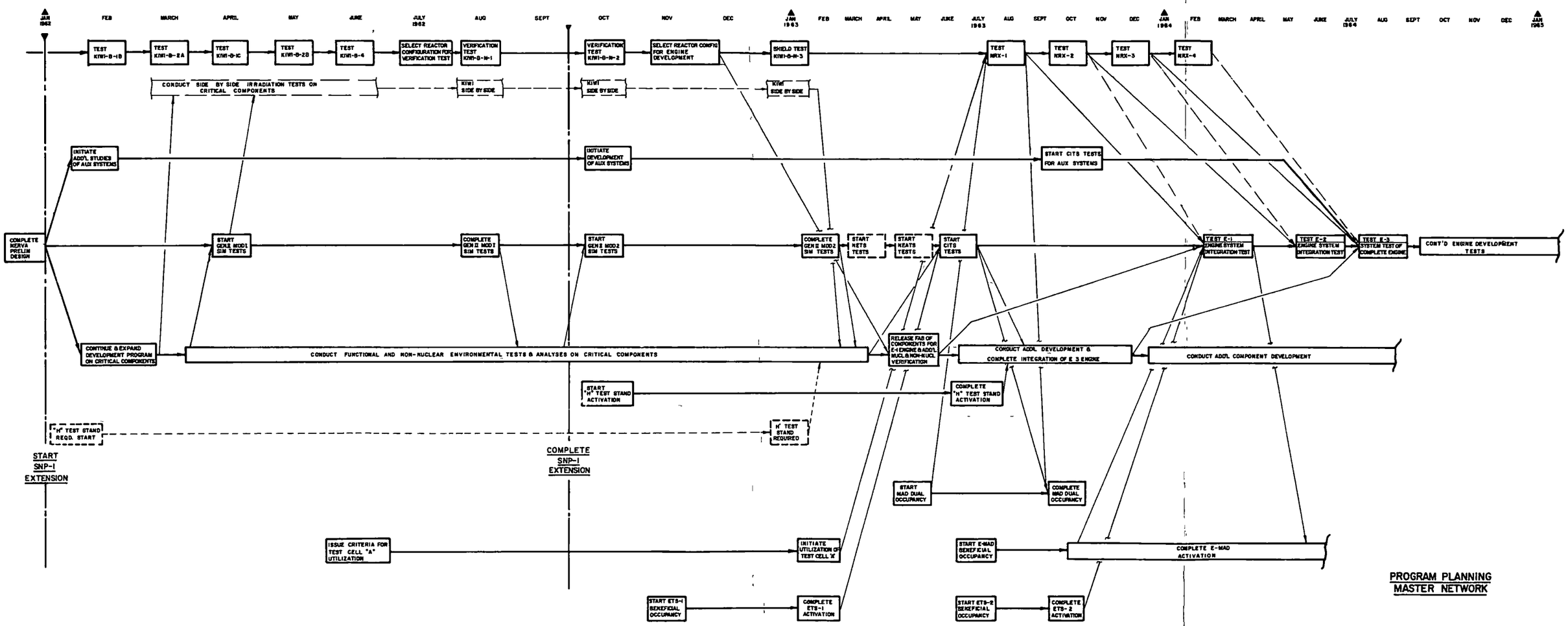

PROGRAM PLANNING MASTER NETWORK

Fig. III-A-6, Vol. I

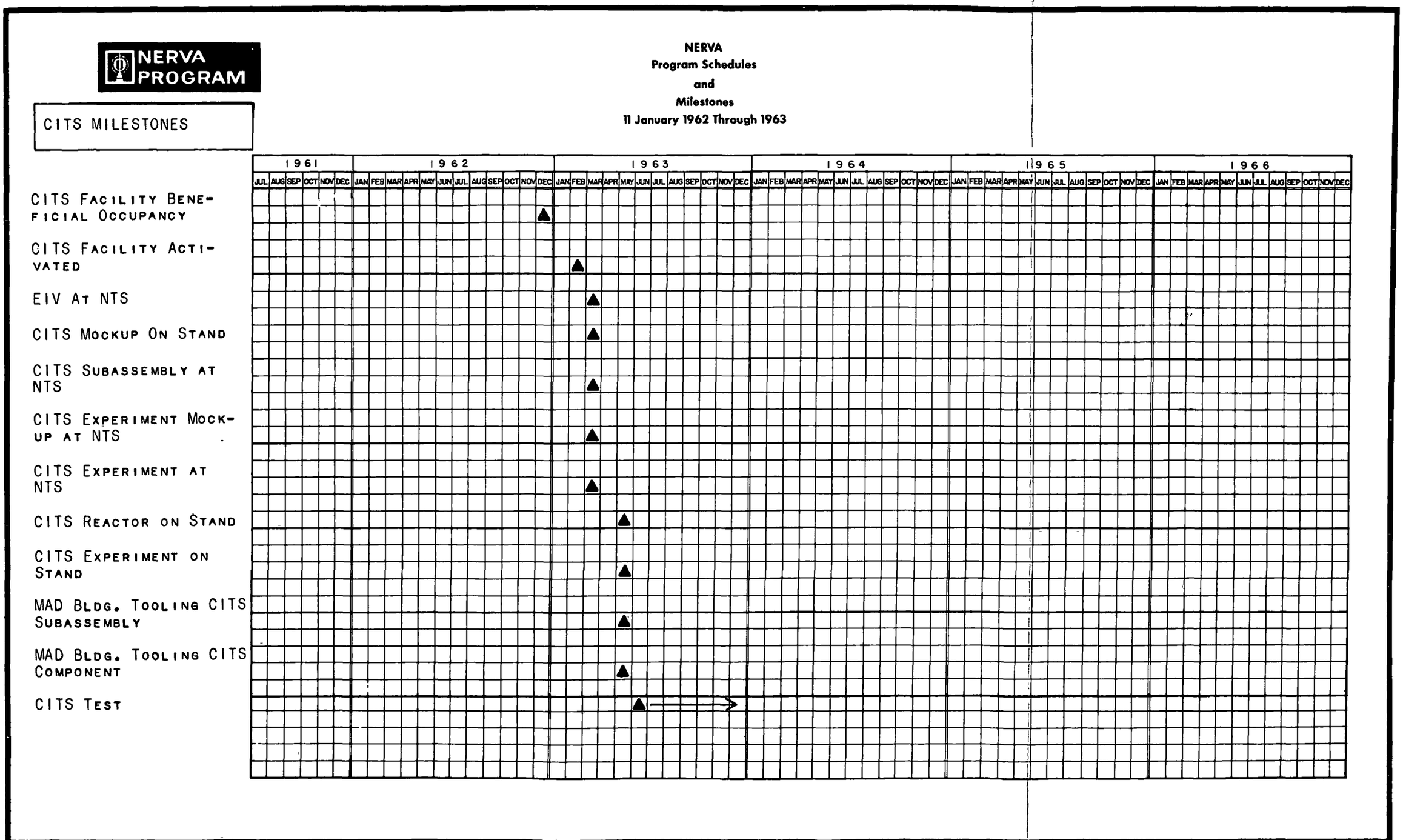

Fig. III-A-7, Vol. I

CUMULATIVE HARDWARE DEMAND AND COMPONENTS TEST SCHEDULE

Component/Assembly	30 September 1962				31 December 1962				30 June 1963			
	Hardware				Hardware				Hardware			
	N	R-A	S	Tests	N	R-A	S	Tests	N	R-A	S	Tests
Propellant Feed System												
TSOV	3	5		325	6	5		428	15	11		622
Reactor Cooldown Valve	4			120	7			250	16	6		417
Remote Disconnects	10			294	13			510	25			804
TPCV	3	5		274	7	7	2	344	17	22	6	482
TBPV	3			112	6			154	14	6		239
Seals	30			443	40			443	43			443
Turbopump Assembly	5	6		19	8	11		53	11	19		78
Pump	7	7		8	10	14	1	20	15	21	1	44
Turbine	5	6	1	4	8	10	2	4	11	15	2	4
Bearings Housing Assembly	5	5	1	25	8	10	2	94	11	15	2	295
Thrust Chamber Assembly												30
Nozzle Assembly												24
Skirt					2			4	7			33
Nozzle*	1*			2*	4			10	16			45
Pressure Vessel	2	1		8	4	3		9	5	4		18
Thrust Vector System												
Gimbal	1			11	1			11	3			32
Roll Control Assembly									3			22
Structure												
PV – Gimbal	1	2		11	1	2		42	2	2		90
PV – Tank	1	2		11	1	2		42	2	2		90
Engine Controls												
Programmer	8			26	8			26	14			56
Thrust Vector Control Actuator									7			34
Roll Nozzle Actuator					2				10			33
TPCV – Actuator	5			39	6			69	15			112
Electrical Harness	2			2	2			2	4			4
Electrical Connectors	2			2	2			2	4			4
Amplifiers	6			23	6			23	14			46
Pressure Transducer	4			24	8			38	20			92
Temperature Transducer	4			24	8			38	20			92
Simulators												
Gen. II (Transient – Cold Flow)	1	4		10	1	4		21	1	4		31
Gen. III (Steady State – Hot Flow)									1			14
Special Items												
Boost Pump Assembly								10				20
Boost Pump					3			28	5			56
Boost Pump Bearings	9				32			30	63			62
Boost Pump Gears					18			45	45			115
Boost Pump Drive Train								8				32
Simulator Injector Tests	3			15	3			15	3			15
Kiwi-B Nozzle	2			2	4			2	2			2
XL87 TCA	3	6		9	3	6		9	4	6		9
Pressure Vessel Materials	78			78	90			90	210			120
Instrumentation												
Doped Germanium Transducers	15			60	15			60	15			60
Vapor Pressure Thermometer	4			10	4			10	4			10
Indium and Indium Alloy Transducers	15			60	15			60	15			60
Miniaturized Transducers	21			60	21			60	21			60
Reactor	4			4	5			5	6			6
Bearing Tester	2			10								

*Add 2 nozzles and 2 tests for alternative hot-bleed program portion.

Column Heads
- N = New Hardware
- R = Reworked Hardware
- A = Available Hardware
- S = Spare Hardware

Fig. III-A-8, Vol. I

CONFIDENTIAL

TEST FACILITY UTILIZATION

		1962												1963											
Test Stand	Type of Test	J	F	M	A	M	J	J	A	S	O	N	D	J	F	M	A	M	J	J	A	S	O	N	D
C-6A	Injector Development	6	3																						
	Nozzle Development									2	3	3	2	5	6	6	6	6	6						
	Kiwi-B			2																					
C-6B	TPA Development	3		4		2	2	5	4	3															
	Simulator				2	2	2	2	2		2	4	5	5	5	14	12	16	12						
	TSOV								3	3															
D-3	Pump Development		2		1						4	2	2	2	2		4	4	1						
G-7	Bearing Development	3	3	8	7	2	3																		
H	NETS and NEATS															4	5	5							
Controls and Cryolab																									
Bay 1 and 2	Bearing Evaluation							3	3	3	15	20	25	20	20	25	25	15	15						
Bay 3	Dynamic Seal Development	20	20	40	20	20	20	30	40	40	40	40	40	55	55	35	45	45	10						
Bay 4	Vacuum Simulation							12	16	16	12	12	18	6	6	6	10	10	8						
Bay 5 and 6	Valves, Actuators, Regulator	64	76	83	76	57	84	86	156	138	133	107	108	86	71	56	155	104	108						

CONFIDENTIAL

III Development Program (cont.)

B. GENERAL DEVELOPMENT APPROACH

Much of the general development philosophy has, of necessity, been defined in the preceding section (III, A). The obvious differences between the NERVA nuclear rocket engine and the general family of liquid chemical rockets imply some changes in general development procedures. The NERVA engine requires that certain of the components perform their function in a combination of environments complicated by the radiation and cryogenic aspects of the problem. In view of these considerations, considerable effort is devoted to the accomplishment of radiation-effects test programs. Plans have been made to perform some preliminary screening tests side-by-side with the scheduled Kiwi test series; in-pile tests of candidate materials are scheduled; and an extensive series of investigations is planned for the CITS program. Extensive use is made of simulation devices during the test programs planned for the engine components and subassemblies, so that realistic environments, as well as interactions, can be provided.

For the NERVA engine, it is logical to conduct a parallel development program of the reactor subassembly and non-radiation-producing assemblies, allowing relatively independent development of the reactor subassembly to proceed concurrently with the development of the remainder of the engine system. The general development path will then consist of testing individual components, incorporating these components into the major subsystems, and conducting development testing of the major subsystems. Final system integration is accomplished after the reactor subassembly and other subsystems have been extensively tested under the anticipated environmental conditions.

Following this general approach, complete-engine-system testing occurs somewhat later than might otherwise be possible, but it is believed that the resulting engine system will readily achieve reliability goals and that the completion of successful development can be forecast with confidence.

III Development Program (cont.)

C. CRITICAL DEVELOPMENT AREAS

The detailed description of the follow-on program, to 30 September 1962, is determined by the work required to accomplish the testing of the E-1 engine in the first quarter of 1964. The E-1 engine is planned to be comprised of prototype hardware and to become the first test of the integration of the reactor and the major engine subsystem. This engine will be completely self-contained and will have a configuration similar to that shown in Figure III-A-1, except that some auxiliary subsystems, including roll control, thrust vector control, gas pressurization, pneumatic power supply, and the master engine controller will not be present. This latter hardware is scheduled to be included in the E-3 engine. The E-3 engine is scheduled for test in August 1964.

The task in the follow-on program is to begin the development of those components considered critical (therefore possessing the longest development lead time) to the operation of the E-1 engine.

Components falling into the critical category must satisfy either or both of the following conditions:

1. They shall be E-engine components which have demonstrated combined nuclear-cryogenic environmental capability by the time E-1 engine tests are initiated - failure of which could cause irrepairable damage to the engine

2. They shall be long development lead-time engine components, and, to meet test schedule commitments, it must be necessary that development shall be initiated prior to September 1962.

Components thus defined as critical are listed in Table III-C-1.

Ground servicing equipment and remote handling equipment will be developed and/or procured only to the extent required to support the NRX tests and the Component Irradiation Test System (CITS) program. Continuing efforts will be expended in engineering studies to resolve E-engine servicing and handling systems.

Because of the problems associated with the development of nozzle coatings, thrust-vector control actuators, destruct systems, and the diagnostic instrumentation are not clearly defined to the extent necessary to estimate the development time required, work to define the problem will be continued or initiated in these areas. Specifically, effort will be concentrated in the following areas of engine system design and development:

III Development Program, C (cont.)

1. Thrust-Chamber Assembly

Emphasis must be placed on components that have in-line functions in the development of the E-engine system, in addition to those areas where the development problem cannot be defined. That is, those components which must be developed prior to the development of other components that are necessary for operation of the E-engine.

The nozzle and pressure vessel are examples of this class of component and development areas. Both components must have been fabricated before the Generation II Model 2 simulator can function. The Generation-II Model 2 simulator is, in turn, necessary to establish the start sequence for the engine and precedes the NETS, which will yield the design information to freeze the E-engine design. The time required for this chain of development events, then, requires an immediate development effort during the follow-on contract on the nozzle and pressure vessel that will provide hardware at the earliest possible time in the program.

The nozzle extension is also required for the Generation-II Model 2 simulator, but it is of such a nature that perturbations of the design performance will not have a large effect on the operation of the E-engine. The time requirement in this case allows initiation of component fabrication to occur after this 9-month program increment, with essentially no slippage in the overall program. The development effort is, therefore, confined to material tests of brazing methods and to a detailed design of the nozzle extension that will be ready for release at the end of this program increment.

2. Control System

Early development of some control components must be carried on in order to determine the design requirements necessary to insure the proper operation of these components in the NERVA environment. Typical items are the servo actuators, transducers, and electronics.

In order to determine the effects of radiation on these components, designs and fabrication must be completed for early irradiation tests in order to obtain information to develop items for the E-engine. Problems of concern are the generation of noise in the electronics, transducers, and cabling, and the reliability of maintaining sufficient accuracy of calibration. This is particularly true for neutron, temperature, and pressure sensors.

Long-lead time for development of adequate actuators requires that early experience be acquired on the detail design problems

posed by the criteria of speed of response, light weight, and environment. Safety problems also impose a design requirement that actuator failure or malfunction can occur in a particular mode.

3. Propellant Feed System

Aside from the turbopump mechanical performance itself, the critical development areas in the propellant feed system are considered to be in the valve seats and seals, pump suction performance, turbopump bearings, and turbopump speed sensing device.

The valve assemblies must be capable of providing a positive seal, but due to the radiation environment, organic materials normally used for positive seals cannot be applied. Metal seals, however, may be subject to distortion and surface defects when exposed to extreme temperature gradients and irradiation. Thus, the sealing of all valves is a major critical development area.

Suction performance of the pump is a major development area in the propellant feed system. The pump must start pumping at a minimum value of net positive suction pressure (close to a saturated liquid) preferably without the aid of a boost pump. The tank pressurization system can provide adequate net positive suction pressure during normal engine operation.

The turbopump bearing is another highly critical development area. Because of the radiation environment, the bearings will be cooled with liquid hydrogen. In addition, metallic cages or cageless bearings compatible with the radiation environment must be employed. Hot spots and other surface effects may occur through the combination of inadequate cooling and irradiation.

A speed-sensing device for the turbopump assembly presents an additional critical development area. Current speed-sensing devices rely on amplification of an electronic signal. This method, however, may not function adequately, due to radiation effects on the electronics Devices that do not depend on amplification of electronic signals, such as tachometer generators, offer a possible solution of this development problem.

4. Reactor Subassembly

The availability of the reactor is clearly critical to the beginning of the engine test program. The failure of the reactor in an engine

test would mean the loss of the test objective and, depending on the nature of the failure, could result in the destruction or contamination beyond practical reuse, of the engine components. In the worst case of reactor failure, the test stand could be rendered unusable for a significant period with resultant delay in the entire program.

Within the reactor development program there are critical component development items, the failure of which would result in reactor and, consequently, engine failure. These items are the structural integrity of the core assembly, the control drum actuators, the control instrumentation, and the shield.

The solution of the core structural integrity is the principal remaining Kiwi test objective and will be a pacing item with respect to the entire reactor development schedule.

The development of the control drum actuators is to a very large extent one of precision engineering and fabrication, and of simplifying the design to assure reliability bordering on the absolute, without sacrificing too much in the areas of actuator energy demand, and response time, and precision.

The control instrumentation and in-core sensory elements are critical to reliable control of the reactor and yet must function under the most adverse radiation and thermal conditions. An interim development program has been established to support this critical item in design.

The shield is a critical item particularly from the standpoint of structural support, heat transfer requirements, and the resolution of possible problems of radiation damage to shield materials.

The research and technical effort necessary to accomplish the development of the engine critical components, and the tasks associated, form the basis of the program proposed for the period 11 January through 30 September 1962. The description of the principal problem areas and the solutions proposed to solve these problems is contained in the following sections of this volume.

TABLE III-C-1

CRITICAL COMPONENTS

Component	Reason for Criticality
Tank shutoff valve and actuator	Must seal tank supply from reactor
Reactor cooldown valve and actuator	Must operate to cool engine
Turbine power-control valve and actuator	Necessary for control of turbopump. Serves as part of engine malfunction and the engine control system
Turbine bypass valve and actuator	Necessary for control of turbopump. Serves as part of engine malfunction and the engine control system
Turbopump assembly	Most critical - necessary to supply reactor with propellant
Reactor	Kiwi design core support structure must be modified for flight loads; modification must be verified by test. Structural failure would result in loss of engine and possibly render test stand unusable for a significant period of time
Reactor control actuator	To actuate reactor control drums for shim, regulation, and scram
Shield	Must be in E-engine to determine effects on reactor neutronics - shields components for engine and LH_2 in prototype vehicle-engine installation
Nozzle assembly	Thrust-producing part of engine in series with propellant flow loop, failure would cause failure of engine
Pressure vessel	Contains reactor under working pressure-failure causes failure of engine

Table III-C-1 (Sheet 1), Vol. I

TABLE III-C-1 (cont.)

Component	Reason for Criticality
Tank shutoff valve pilot valve	Actuates tank shutoff valve (may be shielded during early tests)
Structures	Failure would result in loss of engine
Bellow - pump suction line	Rupture would result in loss of propellant, which, in turn, would cause failure of engine
Disconnects	Seals may leak, resulting in a hazardous condition which, in turn, may cause failure of engine
Electronics	Signal-to-noise ratio may induce erroneous signals causing serious malfunction of engine
Transducers	Signal-to-noise ratio may induce erroneous signals causing serious malfunction of engine

III Development Program (cont.)

D. STATUS OF MAJOR ELEMENTS

The development status of each of the major components of the engine is discussed under appropriate headings in Section IV of this volume. For convenience, the more significant of these status statements are summarized in the following paragraphs:

1. Engine System

Preliminary design of both the heated-bleed and hot-bleed cycle flight configurations of the NERVA engine will have been completed by 10 January 1962.

Conceptual design of an engine utilizing the Phoebus reactor will have been completed.

Generation I simulator testing will have been completed and a report discussing the results prepared and published.

Design of the Generation II Mod 1 simulator has been completed. Tests are scheduled for April 1962.

Major elements of the wooden mockup of the NERVA engine will have been completed and assembled in January 1962.

2. Propellant Feed System

Detailed design for the third generation turbopump will have been completed as well as performance and cavitation tests of the Generation II turbopump (with the Generation II - Generation III impeller).

Bearing tests at 3/4-speed and at partial axial and radial loading will have been completed.

Detailed design of the high speed vertical shaft bearing tester will have been completed, as will the design of the interim tester.

Conceptual design of the boost pump will have been completed.

The tank shutoff valve (TSOV) and the turbine power control valve (TPCV) have been designed and experimental hardware has been built and tested.

3. Reactor Subassembly

Preliminary design of shield and reflector configurations compatible with any of the candidate reactor designs will have been completed by 10 January 1962.

III Development Program (cont.)

Preliminary definition of the reactor subassembly-pressure vessel interface will have been established.

Basic reactor nuclear design, and preliminary steady-state and transient analysis will have been completed.

Conceptual design of reactor inner control loop will have been completed and requirements for core sensory instrumentation and control actuators will have been established.

Conceptual design layout of the Kiwi-B flight adaptation will have been completed including method of core lateral support.

4. Thrust-Chamber Assembly

Preliminary design of the nozzle for both the heated-bleed and the hot-bleed cycle engines will have been completed.

Scale model heat transfer experiments, liquid side and gas side, will have been completed.

Hot bleed port tests, using a modified LR-87-AJ-1 thrust chamber assembly, will have been conducted.

Preliminary design and thermal and stress analysis for the pressure vessel will have been completed.

5. Engine Control System

Preliminary analysis and design for both hot-bleed and heated-bleed engine control system will have been completed.

Schematic design of engine programmer circuits will have been completed.

TPCV and reactor control rod experimental actuators will have been delivered and evaluation tests initiated by 11 January 1962.

6. Destruct System

Major problem areas will have been defined and a special report prepared and issued.

IV. TECHNICAL DISCUSSION

A. GENERAL DISCUSSION

This section presents, for each major subassembly of the engine, a definition of critical components, the status of development of each component, and a summary of the tasks associated with the development of each component. In addition, the extent of the total development task is defined. The hardware and test requirements, supported by schedules and milestones, are defined, where applicable, through 1963. Finally, master program network charts for each major subassembly are presented to convey the development sequence.

The planning networks present information links as well as interdependencies between major activity blocks. The position of activity blocks does not indicate relative or absolute time. The September 1962 reference line is included only to indicate the scope of work covered in this proposal. Activities enclosed by broken lines are those performed under subtasks other than the one shown and are included for purposes of continuity. Activities related by broken lines are not within the scope of the program as proposed, and are included for information purposes only.

In addition, other major program activities are discussed. The specific work programs for the period ending 30 September 1962 are presented in the NERVA Technical Administration Documents in Volume II.

The Kiwi side-by-side radiation-effects testing is limited in scope and is discussed in connection with each major subassembly in this section. Because this testing is limited to the first 9-month period, a composite schedule is included in Volume II as the NERVA Technical Administration Document for Task Item 1.3.8.

IV Technical Discussion (cont.)

B. ENGINE SYSTEM AND SUBSYSTEMS

1. Engine System

This section of the proposal presents a technical discussion of the NERVA engine assembly as presently conceived, and briefly reviews the status of the Phase I effort, the critical development areas as they are seen at this time, the technical program proposed for the solution of the critical problems, and a development program plan which forecasts when and how the technical program will be implemented.

a. Status of Phase I Effort

A brief summary of the design and preliminary development effort for the NERVA engine assembly is presented. This description does not summarize all of the work performed but instead treats only the major items of accomplishment. A complete report of all activities will be presented in the Phase I Summary program report.

(1) Engine Design

Two versions of the NERVA engine have been reduced to preliminary designs. A layout drawing of the heated-bleed cycle FX engine is presented in Figure IV-B-1-1, and the hot-gas bleed variation is shown in Figure IV-B-1-2. Sufficient work has been performed on the two concepts to identify the differences in design. As can be seen by comparison of the two figures, the differences between the two engines lie in the turbine utilized, the nozzle skirt, the plumbing required to complete the flow circuit, and the inclusion of a hot-gas bleed port for extracting the turbine working fluid. Since neither cycle has been selected for development (nor will such a selection occur in the near future), the design activity has been directed toward providing components with as great an interchangeability as possible between the two engines. Thus, analysis has shown that if the heated-bleed turbine and turbine power control valve are made from sufficiently heat-resistant materials, they will perform adequately for either the heated-bleed or hot-gas bleed engine. Preliminary designs for an uncooled nozzle skirt for the hot-bleed engine have been prepared, and design and experimental testing of hot-gas bleed ports has been performed.

Sufficient work has been performed to permit the refinement of engine design in the next program period.

(2) Engine Analysis

Engine analysis utilizing the analog computer has been performed primarily to determine the design-point operation of the heated-bleed engine but sufficient work on the hot-gas bleed engine has been performed to describe differences in operations. These tasks have covered.

(a) Design-point operation analyses.

(b) Trade-off analyses between shield and nozzle heat exchanger performance to determine the effects on overall engine performance for the heated-bleed engine.

(c) Engine vibration analysis.

(3) Engine Simulators

Testing of the Generation I start transient simulator has been performed. A series of 8 test runs have been completed. These tests have shown the value of the simulator program and have yielded data to indicate that low NPSP operation of the turbopump can be achieved, control of the start during boot-strap operation may be achievable, the heat capacity of the propellant feed system provides ample energy to start the engine, and that for simulation purposes a control system employing a simplified reactor synthesis by analog is a feasible scheme.

The design of the Gen. II Mod. 1 simulator shown schematically in Figure IV-B-1-3 and which incorporates full-scale engine hardware has been completed and all of the hardware components for this system have been released for fabrication. It is expected that this simulator will be assembled and ready for test in C-area in April 1962.

(4) Engine Specifications

The design effort in Phase I has resulted in the upgrading of the initial preliminary model specifications for both the AJ 31-6 heated-bleed engine and the AJ 30-5 hot-bleed engine. In addition, an engine-to-test stand interface specification has been completed in draft form. These specifications will be published by the end of Phase I.

(5) Engine Mockup

The combination wood and metal mockup of the NERVA FX heated-bleed engine being fabricated in Phase I has progressed to the

point where the following items have been completed nozzle and nozzle skirt, pressure vessel, upper thrust structure, turbine power control valve, turbopump assembly, control rod actuators, and lower thrust structure

The remainder of the engine mockup parts are scheduled for completion by 10 January 1962 Figure IV-B-1-4 is a photograph showing the partially assembled mockup.

(6) Weight-Control Program

By conventional standards, the weight of the NERVA engine is very high in comparison with its thrust level, and the engine is long, the main masses being situated at significant distances from the gimbal point. As a result of these distances, and because changes in the design of some of the components of the engine can shift the location of the center-of-gravity significantly, the moments-of-inertia of the engine are very sensitive to design changes.

b. Critical Development Areas and Proposed Solutions

This section contains a discussion of critical areas related to the development of the NERVA engine assembly, integrated with discussions on the technical program plan, which is proposed for resolution of these critical problems. The program planning network, Task 1.1, Figure IV-B-1-5, shows the development paths and their interrelationships.

(1) Cycle Selection

(a) Nature of Problem

Two cycles are currently under consideration for the NERVA engine: the hot-bleed cycle, and the heated-bleed cycle. Cycle selection becomes a critical area because of the possible effect on both the cost and length of the engine development program. Partially for this reason, the heated-bleed cycle was chosen for major preliminary design effort in Phase I, however, in weighing the design unknowns, it was also believed that, on a known reliability basis, the heated-bleed cycle had an edge in reliability. On the other hand, the hot-bleed cycle has a known performance advantage, and in some respects presents an easier testing problem, since a major portion of non-nuclear development tests involving the nozzle can be performed without high-altitude environments. Neither cycle has yet been firmly selected for the reason that sufficient engineering data are not available to permit such a choice to be made on an engineering basis. Cycle selection should be made by the last quarter of 1962 in order not to jeopardize the flight date.

Insofar as the hot-bleed engine is concerned, the major development problem is one of extracting hot hydrogen from the core exit region, and quenching it to a workable temperature without melting the bleed port and adjacent bleed-tube system as a result of temperature stratification. Hot-bleed-port tests have been initiated in Phase I to provide some information. In four short tests conducted to date, when using a LO_2/LH_2 combustion chamber and a full-scale bleed port mockup, problems with the test system have prevented obtaining useful data. Further testing with this device will provide data useful in characterizing the nature of the development task. The Phase I program, however, was not designed to produce more than verification of design, and more test data are required before a decision can be reached. In addition, the success of the hot-bleed system also depends on the reliability of the turbine by-pass valve since recent analyses have shown that inadvertent opening of the valve at design power would result in melting of the bleed tube system and a destructive malfunction of the engine. Testing of this device during the interim period is also required to provide the necessary data to help in the cycle selection.

Considering the heated-bleed cycle, the performance level of the cycle is intimately associated with the heat transferred to the turbine working fluid in the shield and nozzle skirt. Uncertainties exist as to what heat input values may be expected because analytical methods required to accurately determine these values are uncertain. Research experiments are currently in progress to determine experimental values for heat-transfer coefficients for hydrogen through model tests using heated nitrogen as a working fluid.

(b) Proposed Solution

The solution to the task of cycle selection is to acquire additional experimental data on the operation of both the hot-gas-bleed system and the turbine power control valve. However, in accordance with the program ground rules outlined in Section III, the performance of further hot-gas-bleed system testing is not considered critical since the E-1 engine can be operated on the heated-bleed cycle. Therefore, the follow-on program to 30 September 1962 does not propose to perform any hardware R&D on the hot-gas bleed system.

The performance of this work is still very important. If delayed until after October 1962, cycle selection cannot occur until early 1963, perhaps not until after release of the E-1 engine for fabrication. If the hot-gas cycle were ultimately chosen, the cycle probably would not be introduced into the engine development test schedule until late 1964, thus possibly delaying the flight-test date.

IV Technical Discussion, B (cont.)

Because of the importance of these tests, an experimental program is discussed in Volume I, Section IV,B,4, of this proposal and the costs are presented as Item 6.3 in Volume II for inclusion in the basic follow-on program if funds permit.

(2) Radiation Effects on Materials

(a) Nature of Problem

The environment of a nuclear rocket engine is one which can affect the physical and mechanical properties of materials. This environment consists of both extremely high and extremely low temperatures, the presence of hydrogen in large quantities, and a very intense neutron and gamma field.

The effects of nuclear radiation on many structural materials has been investigated by several groups (Argonne National Laboratory, Los Alamos Scientific Laboratory, Armour Research Foundation, NASA, and many others). Most of these investigations have been carried out at ambient temperatures and/or at low flux rates and have indicated that there is little or no effect at integrated doses of less than 10^{18} nvt. Enough low temperature work has been carried out, however, to indicate that there is an annealing effect on ferrous materials which occurs between -200 and -300°F. At the lower temperatures, radiation-induced changes in the metallic material properties are "frozen-in." In general, the extent of these effects are not yet well defined. It is considered that there might also be a rate effect, particularly at the temperatures where the annealing rates may be comparable to the generation rates of interstitials or holes, which appear to be the source of the radiation effects.

An investigation has been carried out by General Dynamics/Astronautics, in conjunction with General Dynamics/Ft. Worth, to determine the effects of a combined environment of liquid hydrogen and a radiation field. In this program, control samples were tested at 70°F, while similar samples were tested at -423°F in the thermal environment of liquid hydrogen both with and without exposure to reactor radiation. Materials tested were 2014-T6 aluminum, AT 110 titanium alloy, and Types 301 and 310 stainless steels. These data are available to the NERVA program. In general, the two stainless steels exhibited reduction in ultimate tensile strength and ductility. The titanium exhibited some decrease in elongation, but no significant changes in tensile or yield strength. The notched tensile strength increased following irradiation. The 2014-T6 aluminum alloy showed no reduction in elongation, but exhibited slightly lower yield and tensile strengths.

IV Technical Discussion, B (cont.)

Valuable data have been obtained on the three types of candidate alloys considered for nuclear space vehicle applications. Damage (which resulted in the reduction of the mechanical properties of materials affected by high neutron flux at cryogenic temperatures) indicates that further studies of other materials, specifically the alloys presently being considered in the design of the NERVA engine and components, should be initiated as soon as possible, in order to obtain the extent of these damages prior to final material recommendations.

(b) Proposed Solution

Because of the high fluxes to which NERVA components will be subjected during full-power operation, the NASA Plumbrook reactor is the only test reactor except for the Kiwi-B reactors that can provide test capability at near-NERVA operating conditions. The NASA early recognized this fundamental problem of possible damage at cryogenic temperatures and instituted a research program with the Lockheed Corporation. Continuous communication with NASA, Cleveland Research Center, and Lockheed has been effected, and this communication will continue in the follow-on effort. The Lockheed Corporation is currently carrying out screening tests at ambient and cryogenic temperatures and will initiate the radiation test program when the Plumbrook reactor facility becomes available about July 1962. In this program, the sample temperature can be varied over a wide range, since the temperature is controlled by means of helium refrigerator rather than by means of immersion in liquid hydrogen, as was done in the General Dynamics program. This will also eliminate any possible effects of the hydrogen itself, which could conceivably lead to discrepancies in the two sets of data. If such discrepancies appear, it may prove desirable to add hydrogen to the test environment in the Lockheed program, if possible.

In order to be sure that the NASA material radiation effects program will provide adequate data for the NERVA Program, close coordination will be maintained with Lockheed. In instances where it is found that this program is incomplete, or where materials of interest to NERVA are not being tested, appropriate recommendations will be made via SNPO-Cleveland. In addition to the above, other sources for conducting radiation damage test on materials at cryogenic temperature will be sought. Other sections of this proposal describe the programs proposed for radiation effects tests on components, subassemblies, and subsystems. Reference is made to these sections for greater detail.

(3) Development Testing

(a) Nature of Problem

The development test of the NERVA nuclear rocket engine differs from conventional chemical rocket test inasmuch as the nuclear reactor is surrounded by an intense radiation while at full power and necessitates a remote location for conducting such operations. Because of this fact, each test is costly since additional labor is required to prepare and conduct the test, and to provide post-mortem examination of the test hardware which has become activated by the nuclear environment and which must be handled in special facilities and by special techniques. Minimization of the number of engine tests to achieve the target reliability permits a more economical and shorter development program. The accomplishment of such a program which yields the very high reliability demanded for flight test is thus one of the major critical program tasks to be performed.

(b) Proposed Solution

The solution of the above problem is proposed to be achieved by the following approaches. In general, the development of the reactor and the non-nuclear portions of the NERVA engine will be accomplished for the most part in separate series of tests. Figure IV-B-1-6 is a component hardware demand schedule, the test summary, Figure IV-B-1-7, summarizes the numbers of tests, and the facility to be used for the tests for the non-nuclear portion of the engine development.

The development of the NERVA reactor will be accomplished through the Kiwi-B tests to be conducted by the Los Alamos Scientific Laboratory and through the NERVA NRX reactor tests to be conducted at the Nevada Test Site. The latter tests are largely for proving that the mechanical structure of the reactor core will withstand repeated long duration operation and to demonstrate structural strength for capability to withstand the anticipated flight shock and vibration loads on the engine.

The non-nuclear engine hardware will be developed according to a scheme that permits intensive functional testing of the individual components and the subsystems in which they operate. Initially this type of hardware will be subjected to test in all environments except radiation for proof of basic design. Radiation effects testing will be accomplished in side-by-side tests utilizing the Kiwi-B reactor series and ultimately

in prolonged tests at the NERVA flux levels in the components irradiation test system facility. In this manner, demonstration of individual component and limited subsystem operation in all environments imposed by the NERVA reactor can be accomplished prior to installation into a complete nuclear engine.

Testing of the behavior of the components when arrayed in their respective system to determine interactions can be accomplished by two methods. Obviously such behavior will be determined when complete NERVA engine assemblies are operated. However, prior system experience in the absence of a radiation field can be obtained through the utilization of simulators. Such devices can be tested in plant facilities where high rate, economical testing can be performed. Thus by pursuing a program of individual component qualification in all environments including irradiation prior to engine test, and performing subsystem tests in simulators to obtain advance system interaction data, complete engine tests thus become simply tests for determination of system interactions and, subsequently, proof of engine system performance. By this means it is believed possible to achieve target reliability with a minimum number of complete engine system tests.

The work of Phase I has demonstrated that systems (Generation I and II simulators) of NERVA components can be assembled to simulate, from the standpoint of thermodynamics and fluid mechanics, the first 15 sec of engine startup of the NERVA engine for which period the heat capacity of the nuclear system is the major source of energy available in the real engine. Therefore, during this period, information can be obtained concerning the turbopump assembly boot-strap conditions, heat transfer, flow instabilities, transient temperature distributions, and pressures in the system. It is this period which causes the most concern, since it is the most difficult to analyze mathematically. The data have supplied and will continue to supply the basis for preparation of equations, describing the operation of the engine during this period, which will be incorporated into the analog computer engine analysis program. Beyond the 15-sec point in engine operation, a discharge pressure is achieved which is above the critical pressure of hydrogen, so it is reasonable to assume that, once this point is reached, the two-phase flow problems will not exist. Since the problem of two-phase flow during the early portion of engine startup will have been solved by the Generation II system, it does not appear that further investigation of this time period will be required in other parts of the non-nuclear engine test program.

The effect of all these variables on the propellant-feed control loop can be determined, since a closed-loop control system will be a part of the nuclear engine startup simulator. Various startup schemes can be run to test different modes of startup and different operating methods. The result will be a map of the engine startup regime.

Where possible the intention is to have components in the Generation II nuclear engine startup simulator which are as close to the prototype engine components as possible. These engine components which are not available for the engine startup simulator program will be simulated. Particularly, the nuclear reflector and shield will be simulated, for thermodynamic and fluid mechanic areas by equivalent components which will provide adequate simulation of the functions of these components during the first 15 sec of startup. Other components, such as the nuclear reactor itself, will be simulated electronically by an analog computer connected to a load valve; the computer will also simulate the master engine controller to provide realistic operation of the engine and the engine control system. It is anticipated that, during the test program, newer components will be added as they become available.

The Gen. II Mod. 1 engine startup simulator assembly will test the turbopump assembly, the tank shutoff valve, the turbine power control valve, the pressure vessel, and the connecting lines and fittings. The Gen. II Mod. 2 system (see Figure IV-B-1-8) will, in addition, include the nozzle and heated bleed skirt mockup, the gimbal assembly, the control-rod actuators, the turbine by-pass valve and additional connecting lines and fittings.

Design investigations will be carried further to determine whether reactor heat input can be simulated in the Non-Nuclear Engine Test System (NETS), as well. This system is described below. The Test Summary, Figure IV-B-1-7, shows the test facility, test dates, and numbers of tests planned for the NET system.

A second system is presently visualized as being both necessary and useful in performing the NERVA engine development program. This system is described as a non-nuclear engine acceptance test (NEAT) system whose purpose is to acceptance-test hardware prior to delivery to NTS for either CITS work or installation in an engine.

A portion of the work proposed for the immediate follow-on period is to develop the conceptual designs and prepare preliminary test plans for both NETS and NEATS. The overall program schedule for accomplishment plus test and hardware requirements through June 1963 and the pictorial representation of the simulator development plan are shown in Figures IV-B-1-5, IV-B-1-6, IV-B-1-7, and IV-B-1-9. The details of the program to 30 September 1962 are presented in Volume II, Section III, Task Item 1.1.

The task remaining to be performed is the design and operation of a system or systems, which will permit meaningful simulation of steady state operation, and the full ramp from start to steady state operation. It is proposed that the design effort initiated in Phase I be continued to accomplish this task. The Test Summary, Figure IV-B-1-7 shows the facility test dates and number of tests scheduled for the Gen. II Mod. 1 simulator. Also shown are the tests planned for the Gen. II Mod. 2 simulator.

The design of a system to simulate steady state operation of the NERVA engine is complicated by the necessity to simulate heat fluxes to the various components due either to conduction or to the incidence of hard gamma radiation. Since large quantities of heat energy are deposited by these mechanisms, convenient simulation is difficult to achieve. There is, however, a design approach which permits steady state operation but not design heat input that will serve a necessary function in the development program. This system is called the Non-Nuclear Engine Test System (NETS) and a conceptual schematic is shown in Figure IV-B-1-10.

The purpose of the NETS is to serve as an engine subsystem and components test bed for non-nuclear developmental testing, with the intention of operating all engine non-nuclear components at their design points, thus placing full loads on all the system components. This means full-scale dynamic loading of these components at design flow rate and pressure. This type of test is essential, since it provides the only means of testing all of the non-nuclear engine components at full load, short of installation in the NERVA engine. While the NETS probably cannot be ideal from the standpoint of simulating the actual environment of the NERVA engine, it can provide a reasonable means of testing all of the non-nuclear engine hardware in one integrated test system and under operating conditions which are reasonably close to the actual operation conditions of the NERVA engine.

The NETS could conceivably include an LH_2-LO_2 combustion chamber, which would fire through the NERVA nozzle. This liquid propellant system would be operated at a mixture ratio and a chamber pressure which would supply the design-point nozzle gas-side wall temperatures and heat fluxes. Through the use of an auxiliary heat source, simulation of the heat input to the turbine fluid contained in the reflector and shield regions can be achieved. If the combustion chamber is included in this engine test system, a dynamic thrust load, as well as combustion induced vibrations and acoustical vibrations, are supplied to the NERVA engine

structure. It is then possible to test the thrust vector control system under dynamic loads, and to operate the propellant feed system, with its control loop, at design point conditions of temperature and pressure. The NETS is a subsystem and component test bed which can operate for extended periods to aid the development of the subsystems and their components, as well as to provide reliability data concerning these subsystems and components. Operations of the NETS, in place of using individual subsystem-component tests, yields an economic advantage, as well as providing more realism, since subsystem interactions may be examined.

It appears at this time that the requirements for computer control equipment will be very nominal and that standard sequence control units may be employed to bring the system to the operating design point. It is not intended, for instance, that the reactor inner control loop will be evaluated on these test systems except to test the mechanisms involved. The only closed-loop control system which will be used will be that involving the propellant-feed system wherein control is maintained between the chamber pressure and the turbine power control valve setting. In summary the NETS concept permits the following type of evaluations:

1 The NERVA nozzle may be run for full duration, with the chamber pressure or nozzle heat flux loads that will be experienced during actual operation.

2 It will permit testing of the entire propellant feed system for extended durations under design-point conditions of temperature, pressure, and flow rate.

3 The engine-thrust structure and the thrust-vector control system may be tested for extended durations under dynamic and static loads, and with a fair degree of simulation of the engine vibrational and thrust loading.

4 The reflector and shield, and control-drum mechanisms, as well as the control-drum actuators, may be tested for extended durations at cryogenic temperatures with pressure loading, and in a vibration environment.

5 The roll control system may be tested for extended durations at pressures and temperatures very nearly identical with those to which the system will be subjected during its actual operation.

6 The pneumatic supply system may be tested for extended durations.

(4) Pump-Inlet Conditions

(a) Nature of Problem

The pump-inlet conditions are critical, since for proper operation of the NERVA engine, the propellant pump must function in a satisfactory manner. For this to be accomplished, sufficient NPSP must be available at the inlet of the pump to permit normal operation of the pump. In chemical-rocket engines, pressure is applied to the tank above the surface of the liquid to supply NPSP to the fluid entering the pump, however, in the case of a nuclear rocket engine, the energy input to the propellant within the tank due to radiation leakage from the reactor causes the propellant temperature to rise sufficiently that tank pressurization requirements may become excessive. To overcome the gross effect of the radiation field on the propellant within the tank, a primary shield will be incorporated within the NERVA pressure vessel to attenuate this flux field to an acceptable value. In addition to the nuclear heating of the propellant within the tank, there will be heat leak through the walls of the tank due to the radiant energy from the sun, and to the convective heat transfer from aerodynamic heating during the boost phase of the stage flight.

The NERVA engine is expected to be capable of restart after extended coast periods in space, during which period it is reasonable to assume that the propellant within the tank will come to equilibrium with its vapor pressure. Thus, to obtain significant NPSP at the inlet of the pump, a slug of helium or hydrogen gas would be required to give the tank fluid NPSP. This slugging of the tank with pressurization gas is undesirable, due to the weight and controls associated with the storage and proper venting of the pressurization gas to the tank.

Other alternatives are to utilize the engine tank pressurization system, or to have the NERVA engine fitted with a boost pump or with a main stage pump, which will require little or no NPSP. It is considered impractical to utilize the engine tank pressurization system during engine restarting for the purpose of supplying net positive suction pressure, since a relatively large amount of gas is required when the ullage volume of the tank is large and this gas is not available during restarting.

The boost pump represents additional pumping equipment and is therefore undesirable from a weight and reliability standpoint if the job can be accomplished without the use of the boost pump.

The technical task which remains to be solved is the derivation of a pumping system that will meet the pumping requirements anticipated in operational flight. Ideally this system should be capable of pumping boiling hydrogen.

(b) Proposed Solution

The solution to this problem follows two paths. If the NPSP characteristics of the feed system pump cannot be reduced to an acceptable value, a boost pump capable of very low NPSP performance can be employed in series with the main feed pump to achieve low overall NPSP pumping capability. The preliminary design of a boost pump for the NERVA engine was initiated during Phase I and it is proposed that this design effort be continued in the follow-on program.

The second and more attractive solution is to expend effort to develop a pump that will work satisfactorily with zero NPSP or which will function during engine starting transient with little or no net positive suction pressure. The design of impellers and inducers to accomplish this objective started in Phase I. The development plan and detailed technical approach are discussed in Section IV,B,2.

(5) Integration of Control Systems with Propellant-Feed System

The critical problem associated with the integration of the reactor and the propellant feed system stems from the fact that there is an inter-reaction between the propellant accumulated within the core and its reactivity worth and the core nucleonics, thus there is a potentially hazardous condition when the propellant-feed system is married to the reactor for the first time. This interaction will be calibrated during the NRX tests and with the Generation II non-nuclear engine tests. The Generation II tests will provide propellant accumulation transient data through the initial phase of the engine startup. This problem cannot be fully evaluated until the first E-engine is operated, and its true magnitude has yet to be experimentally evaluated. The Kiwi-B program, to be conducted in the first quarter of 1962 will provide the first detailed experimental data on the operation of a reactor with liquid hydrogen.

CONFIDENTIAL — RD

STATION POINTS	STATION DESCRIPTION
0.000	INTERFACE, ENGINE ASSEMBLY TO LH_2 TANK
17.000	CENTERLINE, TANK-TVC ACTUATOR CONNECTION
24.000	CENTERLINE, PNEUMATIC SUPPLY SPHERES
40.400	CENTERLINE, GIMBAL
40.400	CENTERLINE, ENGINE-TVC ACTUATOR CONNECTION
57.400	INTERFACE, TURBOPUMP TO SUCTION LINE
62.692	CENTERLINE, PUMP DISCHARGE
71.146	CENTERLINE, TURBINE INLET
80.400	CENTERLINE, TURBINE EXHAUST
87.517	FWD CLOSURE APEX, PRESSURE VESSEL (UNPRESSURIZED)
90.600	INTERFACE, THRUST STRUCTURE TO PRESSURE VESSEL
100.162	FWD EQUATOR, PRESSURE VESSEL
158.542	AFT EQUATOR, PRESSURE VESSEL
167.746	INTERFACE, PRESSURE VESSEL TO NOZZLE
184.994	CENTERLINE, NOZZLE THROAT
190.694	CENTERLINE, NOZZLE INLET FROM PUMP
195.334	CENTERLINE, SKIRT INLET FROM PRESSURE VESSEL DOME
203.514	CENTERLINE, SKIRT DISCHARGE TO TURBINE
262.163	EXIT PLANE, NOZZLE SKIRT, NERVA ENGINE

Aerojet-General Corporation — NERVA OPERATIONS

TITLE: NERVA ENGINE LAYOUT — HEATED BLEED CYCLE

DRAWN: F. DAHLING — DESIGN: 11-27-61

UNLESS OTHERWISE SPECIFIED: DIMENSIONS ARE IN INCHES. TOLERANCES ON DECIMALS .XX ± .03, .XXX ± .010. DO NOT SCALE DRAWING

CODE IDENT NO. 70143 — DWG SIZE J — DWG NO. 0-261420 — SCALE 1/4

Fig. IV-B-1-1, Vol. I

CONFIDENTIAL — RD

AGC 5209

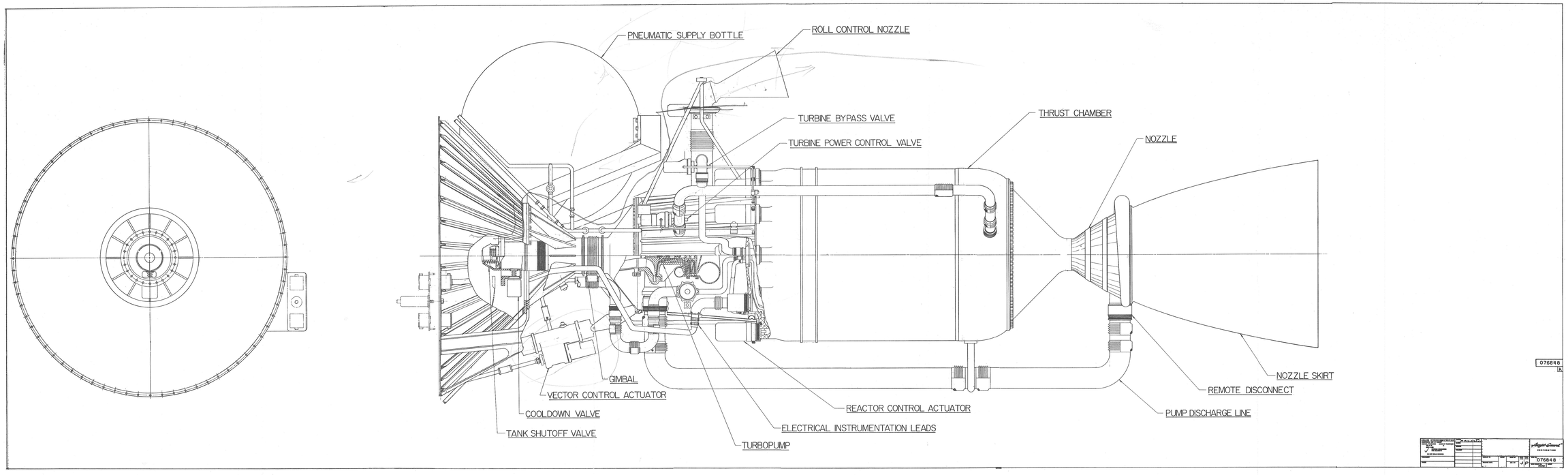

Nuclear Rocket Engine Assy. Hot Bleed

Fig. IV-B-1-2, Vol. I

GENERATION II (MOD I) NERVA ENGINE SIMULATOR

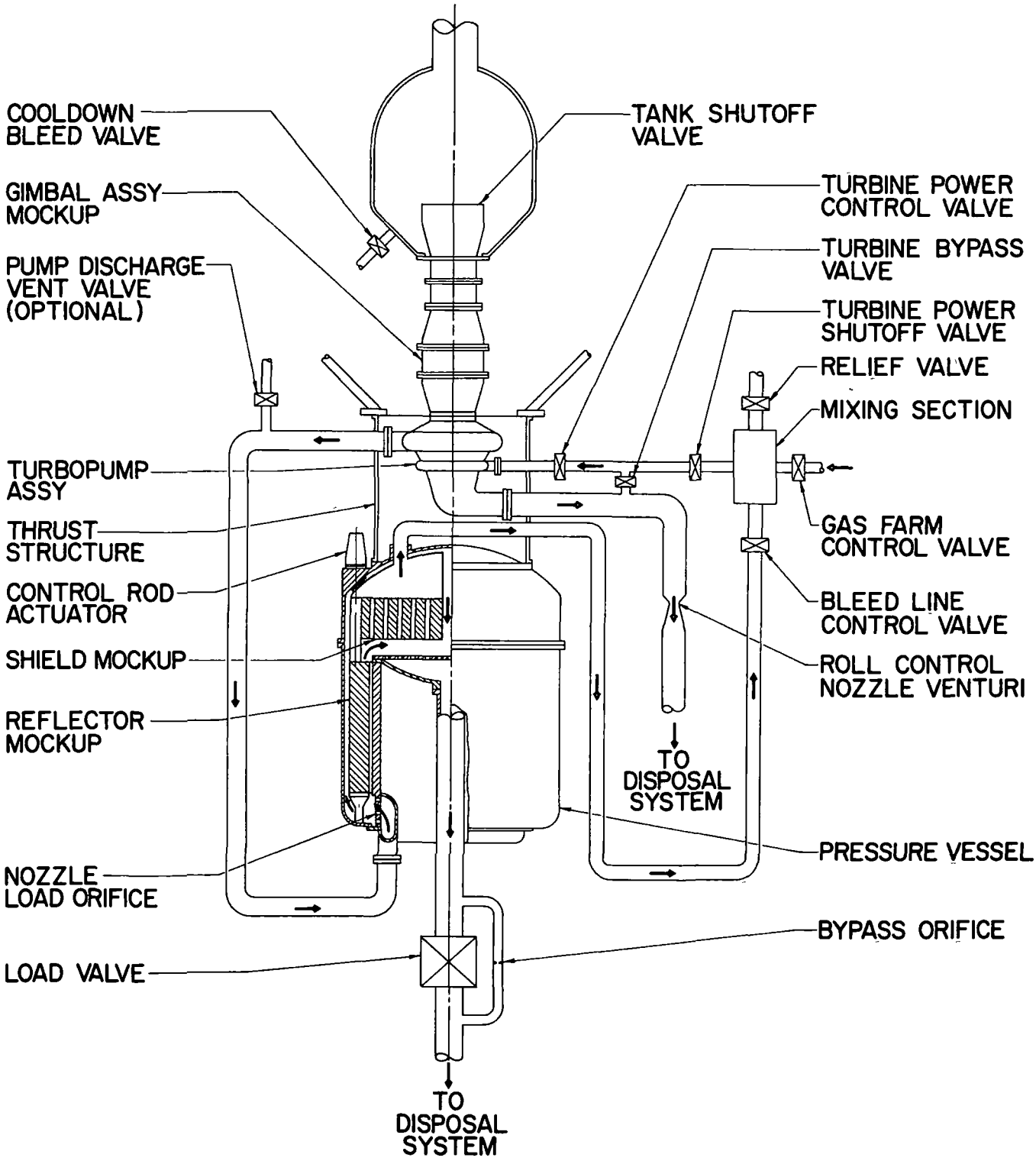

Fig. IV-B-1-3, Vol. I

Mock Up

Fig. IV-B-1-4, Vol. I

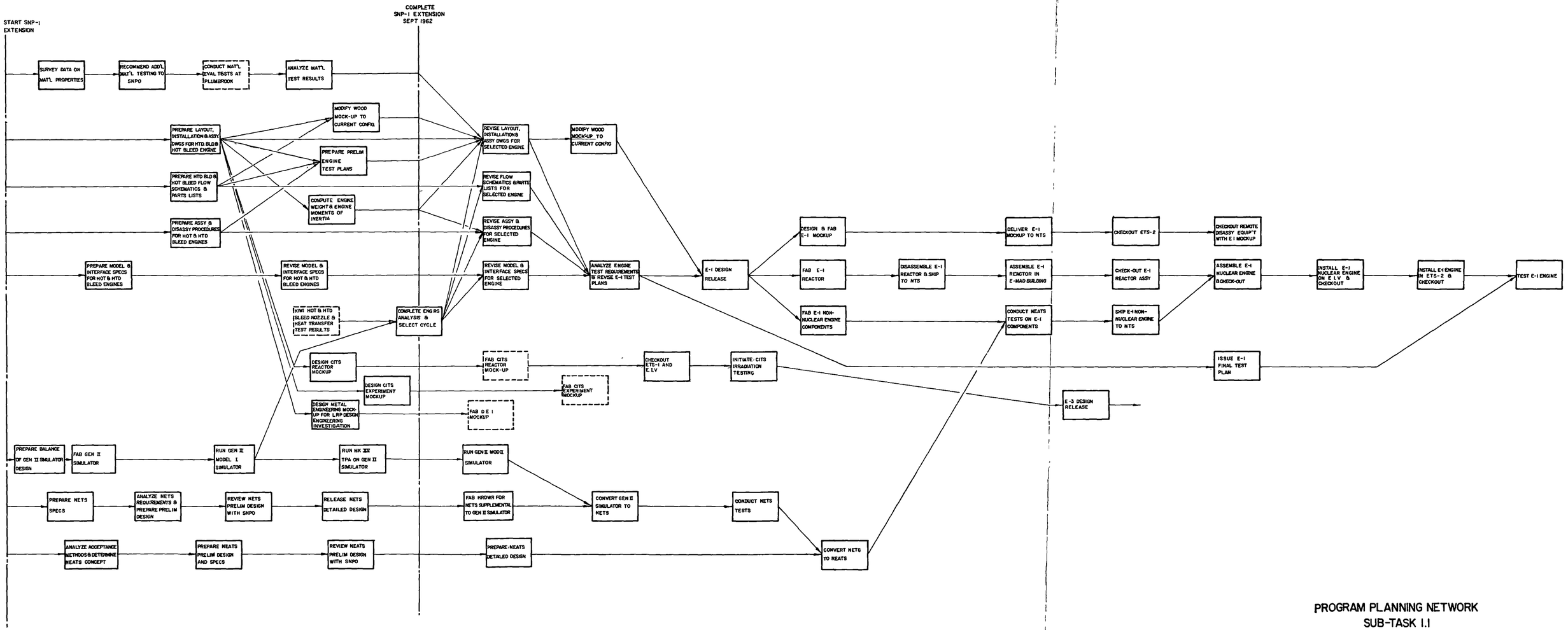

PROGRAM PLANNING NETWORK
SUB-TASK I.I
ENGINE SYSTEM DEVELOPMENT

Fig. IV-B-1-5, Vol. I

HARDWARE DEMAND SCHEDULE

Component	Jan 1962					Feb 1962					Mar 1962				
	T	A	N	R	S	T	A	N	R	S	T	A	N	R	S
Propellant Feed System															
TSOV	5	5													
Reactor Cooldown															
Remote Disconnects															
TPCV	5	5													
TBPV															
Seals															
TPA	1	1													
Pump											1		1		
Turbine											1		1		
Bearing Housing															
Boost Pump Assembly															
Boost Pump															
Boost Pump Bearing Sets															
Boost Pump Gears															
Thrust Chamber Assembly															
Skirt															
Nozzle															
Pressure Vessel											1		1		
Thrust Vector System															
Gimbal															
Roll Control Assembly															
Structure PV – Gimbal			1												
Structure PV – Tank			1												
Kiwi-B Nozzle											2		2		
Hot Bleed Chambers															
Hot Bleed Nozzle															
XLR-87 TCA	4	2	2			1		1			1			1	
Instrumentation															
Doped Germanium Transducers															
Vapor Pressure Thermometer															
Indium & Indium Alloy Transducers															
Miniaturized Transducers															
Simulator Temperature Installation															
Engine Controls															
Programmer						3		3			1		1		
Thrust Vector Control Actuator															
Roll Nozzle Actuator															
TPCV – Actuator															
Electrical Harness											1		1		
Electrical Connectors											1		1		
Amplifiers											2		2		
Pressure Transducer	1		1			1		1			1		1		
Temperature Transducer	1		1			1		1			1		1		
Simulator	1		1												
Reactor											1		1		
Bearing Tester															
Interim						1		1							
High Speed															

Component	Apr 1962					May 1962					Jun 1962				
	T	A	N	R	S	T	A	N	R	S	T	A	N	R	S
Propellant Feed System															
TSOV															
Reactor Cooldown															
Remote Disconnects											4		4		
TPCV											3		3		
TBPV															
Seals											10		10		
TPA	1		1								2		2		
Pump						3		3			2		1	1	
Turbine						2		2			2		1	1	
Bearing Housing	1		1			2		2			2		1	1	
Boost Pump Assembly															
Boost Pump															
Boost Pump Bearing Sets	1		1			1		1			1		1		
Boost Pump Gears															
Thrust Chamber Assembly															
Skirt															
Nozzle															
Pressure Vessel															
Thrust Vector System															
Gimbal															
Roll Control Assembly															
Structure PV – Gimbal											1		1		
Structure PV – Tank											1		1		
Kiwi-B Nozzle															
Hot Bleed Chambers															
Hot Bleed Nozzle															
XLR-87 TCA	2			2		1			1						
Instrumentation															
Doped Germanium Transducers	5		5												
Vapor Pressure Thermometer															
Indium & Indium Alloy Transducers	5		5												
Miniaturized Transducers	5		5												
Simulator Temperature Installation															
Engine Controls															
Programmer	3		3			1		1							
Thrust Vector Control Actuator															
Roll Nozzle Actuator															
TPCV – Actuator	1		1			1		1			1		1		
Electrical Harness						1		1							
Electrical Connectors						1		1							
Amplifiers	2		2								2		2		
Pressure Transducer	1		1												
Temperature Transducer	1		1												
Simulator											1		1		
Reactor	1		1								1		1		
Bearing Tester															
Interim															
High Speed															

Component	Jul 1962					Aug 1962					Sep 1962				
	T	A	N	R	S	T	A	N	R	S	T	A	N	R	S
Propellant Feed System															
TSOV	3		3												
Reactor Cooldown	4		4												
Remote Disconnects	3		3			3		3							
TPCV															
TBPV	3		3												
Seals	10		10			10		10							
TPA	3		1	2		2			2		2		1	1	
Pump	2			2		4		1	3		2		1	1	
Turbine	3			2	1	2		1	1		2			2	
Bearing Housing	2			1	1	4		1	3						
Boost Pump Assembly															
Boost Pump															
Boost Pump Bearing Sets	2		2			2		2			2		2		
Boost Pump Gears															
Thrust Chamber Assembly															
Skirt															
Nozzle											1		1		
Pressure Vessel	1		1			1			1						
Thrust Vector System															
Gimbal											1		1		
Roll Control Assembly															
Structure PV – Gimbal	1			1							1			1	
Structure PV – Tank	1			1							1			1	
Kiwi-B Nozzle															
Hot Bleed Chambers											(2)	(2)			
Hot Bleed Nozzle													(2)		
XLR-87 TCA															
Instrumentation															
Doped Germanium Transducers															
Vapor Pressure Thermometer															
Indium & Indium Alloy Transducers															
Miniaturized Transducers															
Simulator Temperature Installation															
Engine Controls															
Programmer															
Thrust Vector Control Actuator															
Roll Nozzle Actuator															
TPCV – Actuator						1		1			1		1		
Electrical Harness															
Electrical Connectors															
Amplifiers															
Pressure Transducer															
Temperature Transducer															
Simulator	1			1		1			1		1			1	
Reactor						1		1							
Bearing Tester															
Interim															
High Speed	1		1												

Component	Oct 1962					Nov 1962					Dec 1962				
	T	A	N	R	S	T	A	N	R	S	T	A	N	R	S
Propellant Feed System															
TSOV											3		3		
Reactor Cooldown											3		3		
Remote Disconnects	3		3												
TPCV						3		1		2	5		3	2	
TBPV											3		3		
Seals	10		10												
TPA	2			2		3		1	2		3		2	1	
Pump	4		1	3		5		2	3		2			1	1
Turbine	3		1	2		4		2	1	1	1			1	
Bearing Housing	3		1	2		4		2	2		2			1	1
Boost Pump Assembly															
Boost Pump	1		1			1		1			1		1		
Boost Pump Bearing Sets	7		7			7		7			9		9		
Boost Pump Gears	6		6			6		6			6		6		
Thrust Chamber Assembly															
Skirt						1		1			1		1		
Nozzle	1		1			1		1			1		1		
Pressure Vessel	2		2			2			2						
Thrust Vector System															
Gimbal															
Roll Control Assembly															
Structure PV – Gimbal															
Structure PV – Tank															
Kiwi-B Nozzle											2		2		
Hot Bleed Chambers															
Hot Bleed Nozzle															
XLR-87 TCA															
Instrumentation															
Doped Germanium Transducers															
Vapor Pressure Thermometer															
Indium & Indium Alloy Transducers															
Miniaturized Transducers	8		8			8		8			8		8		
Simulator Temperature Installation															
Engine Controls															
Programmer															
Thrust Vector Control Actuator															
Roll Nozzle Actuator											2		1		1
TPCV – Actuator	1		1												
Electrical Harness															
Electrical Connectors															
Amplifiers															
Pressure Transducer											4		4		
Temperature Transducer											4		4		
Simulator															
Reactor	1		1												
Bearing Tester															
Interim															
High Speed															

Component	Jan 1963					Feb 1963					Mar 1963				
	T	A	N	R	S	T	A	N	R	S	T	A	N	R	S
Propellant Feed System															
TSOV											3		3		
Reactor Cooldown											3		3		
Remote Disconnects															
TPCV	3		1		2	2			2		8		4	2	2
TBPV											3		3		
Seals															
TPA	2			2		1		1			2			2	
Pump	4		2	2		1			1		3		1	2	
Turbine	3		1	2							2			2	
Bearing Housing	3		1	2							2			2	
Boost Pump Assembly															
Boost Pump						1		1			1		1		
Boost Pump Bearing Sets	8		8			8		8			9		9		
Boost Pump Gears						6		6			6		6		
Thrust Chamber Assembly															
Skirt	1		1			1		1			1		1		
Nozzle	2		2			2		2			2		2		
Pressure Vessel															
Thrust Vector System															
Gimbal	1		1								1		1		
Roll Control Assembly	1		1												
Structure PV – Gimbal															
Structure PV – Tank															
Kiwi-B Nozzle															
Hot Bleed Chambers															
Hot Bleed Nozzle															
XLR-87 TCA															
Instrumentation															
Doped Germanium Transducers															
Vapor Pressure Thermometer															
Indium & Indium Alloy Transducers															
Miniaturized Transducers						8		8			8		8		
Simulator Temperature Installation															
Engine Controls															
Programmer											5		5		
Thrust Vector Control Actuator															
Roll Nozzle Actuator											1		1		
TPCV – Actuator	3		3			2		2			2		2		
Electrical Harness															
Electrical Connectors															
Amplifiers	2		2			2		2			2		2		
Pressure Transducer	4		4			4		4			4		4		
Temperature Transducer	4		4			4		4			4		4		
Simulator															
Reactor	1		1												
Bearing Tester															
Interim															
High Speed															

Component	Apr 1963					May 1963					Jun 1963				
	T	A	N	R	S	T	A	N	R	S	T	A	N	R	S
Propellant Feed System															
TSOV	4		1	3		3		3			5		2	3	
Reactor Cooldown	4		1	3		3		3			5		2	3	
Remote Disconnects	6		6			2		2			4		4		
TPCV	2		1	1		5		3	2		3		1	2	
TBPV	4		1	3		3		3			4		1	3	
Seals	1		1								2		2		
TPA	2			2		3		2	1		1			1	
Pump	1			1		1			1		2		2		
Turbine	2		2			1			1						
Bearing Housing	2		2			1			1						
Boost Pump Assembly															
Boost Pump															
Boost Pump Bearing Sets	2		2			2		2			2		2		
Boost Pump Gears	5		5			5		5			5		5		
Thrust Chamber Assembly															
Skirt						1		1			1		1		
Nozzle	2		2			2		2			2		2		
Pressure Vessel	1		1								1			1	
Thrust Vector System															
Gimbal											1		1		
Roll Control Assembly											2		2		
Structure PV – Gimbal											1		1		
Structure PV – Tank											1		1		
Kiwi-B Nozzle															
Hot Bleed Chambers															
Hot Bleed Nozzle															
XLR-87 TCA						1		1							
Instrumentation															
Doped Germanium Transducers															
Vapor Pressure Thermometer															
Indium & Indium Alloy Transducers															
Miniaturized Transducers	8		8			8		8			8		8		
Simulator Temperature Installation															
Engine Controls															
Programmer						1		1							
Thrust Vector Control Actuator	3		3			2		2			2		2		
Roll Nozzle Actuator	2		2			2		2			3		3		
TPCV – Actuator	4		4			2		2			2		2		
Electrical Harness													2		
Electrical Connectors													2		
Amplifiers											2		2		
Pressure Transducer											3		3		
Temperature Transducer											3		3		
Simulator	1		1												
Reactor															
Bearing Tester															
Interim															
High Speed															

Column Heads
- T = Total
- A = Available from Stores
- N = New
- R = Reworked
- S = Spare
- () = Hardware for Hot Bleed Program

Fig. IV-B-1-6, Vol. I

COMPONENT/SUBASSEMBLY TEST SCHEDULE
ENGINE SYSTEM (TASK ITEM 1.1)

Component or Subassembly	Config. No. or Series	Test Objective	Facility	No. of Tests 1962 J F M A M J J A S O N D	No. of Tests 1963 J F M A M J J A S O N D	Total
System Simulator	Gen. II Mod-1	Cold flow – transient operational tests to provide data regarding performance and component interaction effects. This system utilizes no nozzle or skirt. Inlet plenum distributes propellant to reflector. Yields transient pressure, thermal and flow data.	LRP Area C-6B	2 2 2 2 2		10
	Gen. II Mod-2	Cold flow – transient tests to refine and supplement Mod-1 tests. Contains nozzle, skirt and gimbal system.	LRP Area C-6B	2 4 5	5 5	21
	NETS Gen. III	Hot flow – transient steady state at near design point operating conditions.	LRP Area H		4 5 5	14

Fig. IV-B-1-7, Vol. I

GENERATION II (MOD 2) NERVA ENGINE SIMULATOR

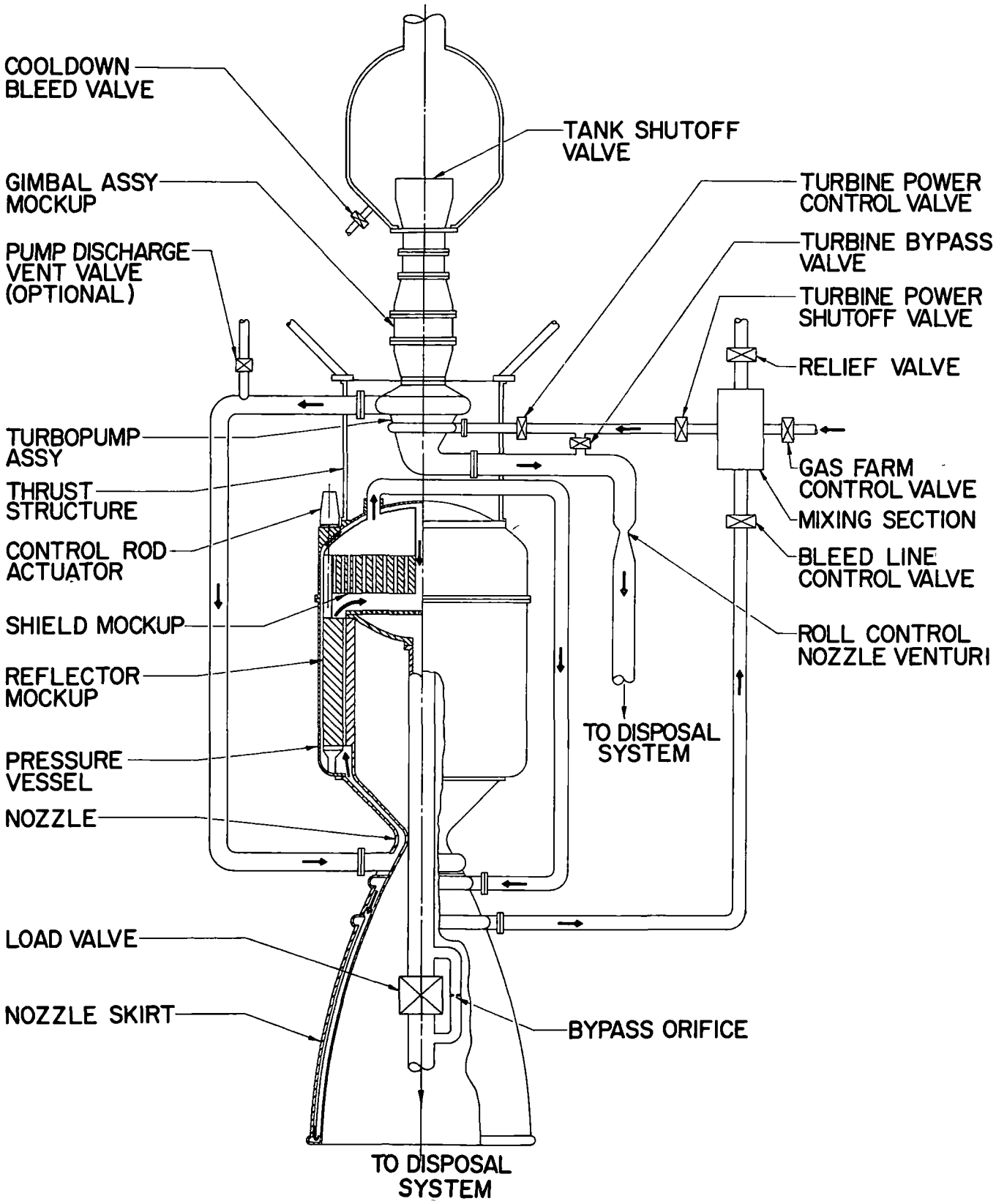

Fig. IV-B-1-8, Vol. I

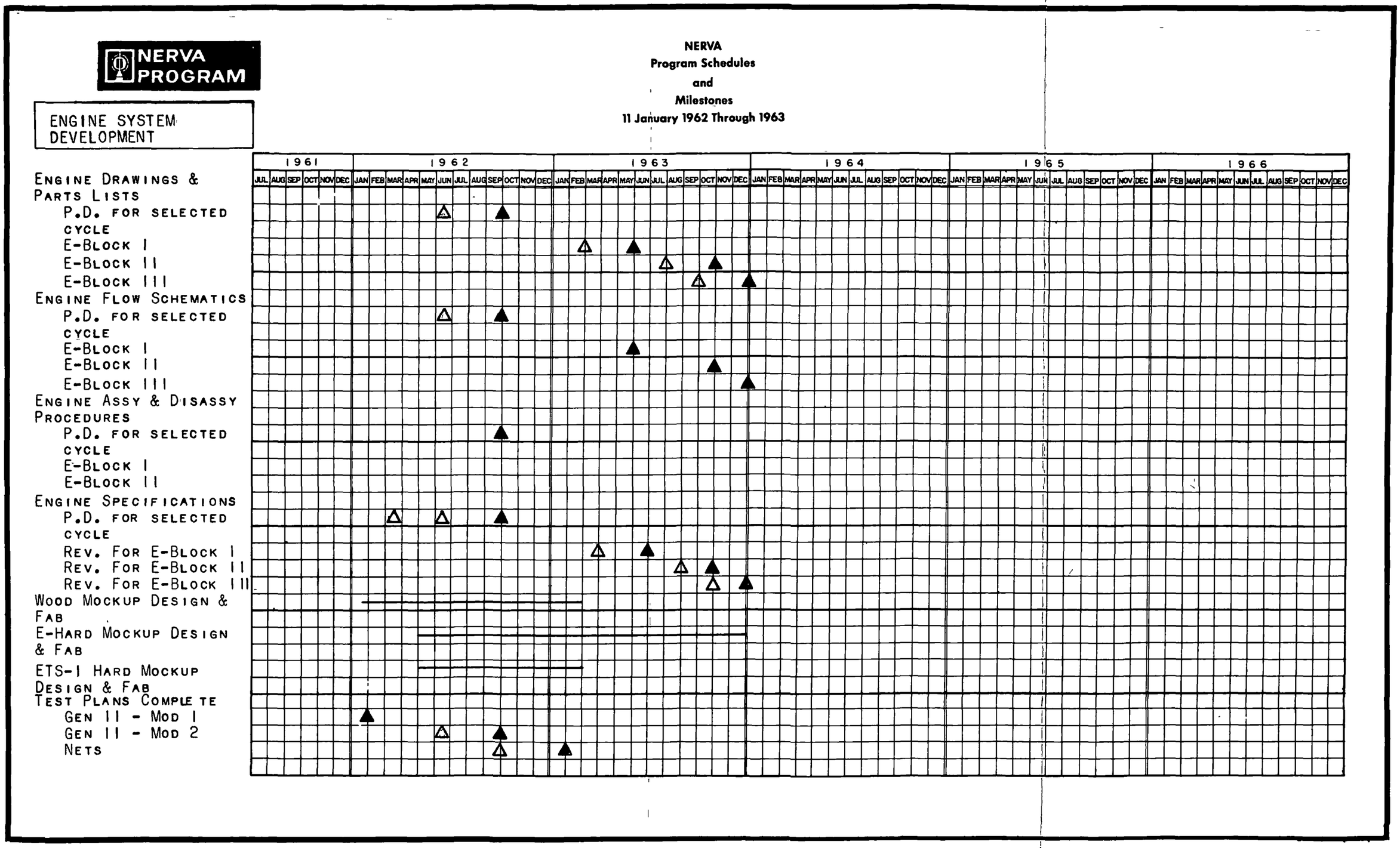

Fig. IV-B-1-9 (Sheet 1), Vol. I

NERVA PROGRAM

ENGINE SYSTEM DEVELOPMENT

NERVA
Program Schedules
and
Milestones
11 January 1962 Through 1963

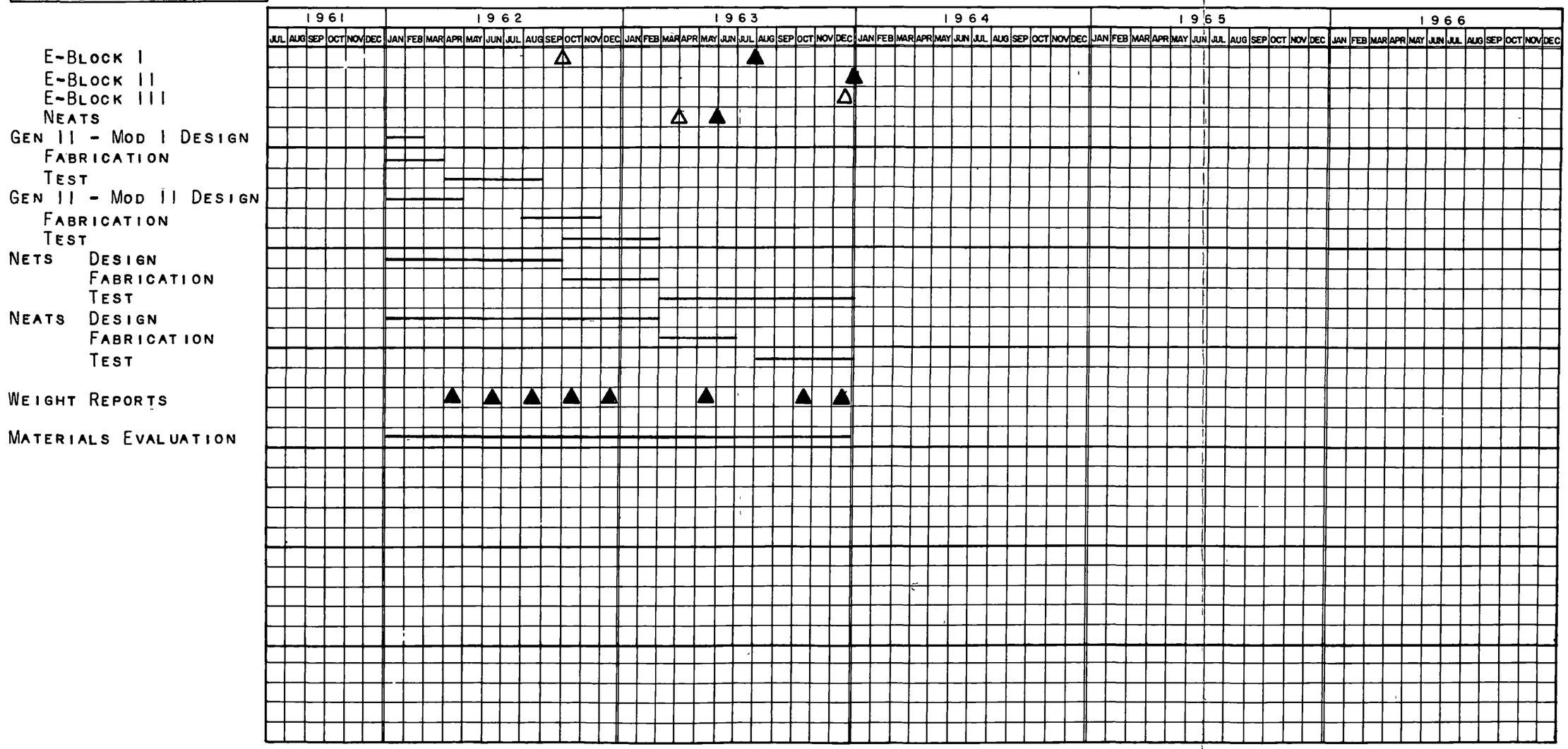

Fig. IV-B-1-9 (Sheet 2), Vol. I

NON NUCLEAR ENGINE TEST SYSTEM (NETS) CONCEPTUAL DESIGN

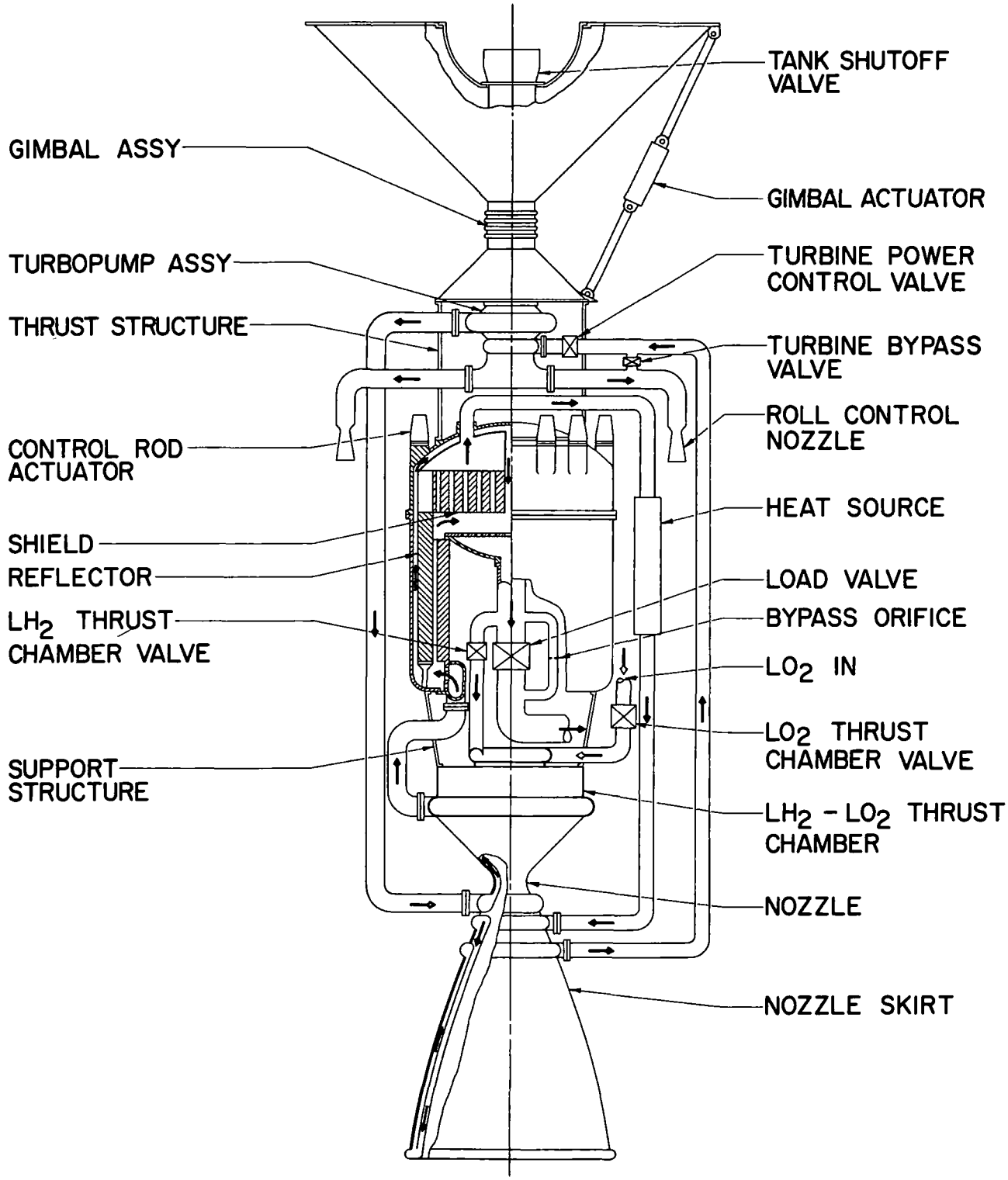

Fig. IV-B-1-10, Vol. I

2. Propellant-Feed System

The function of the propellant feed system is to supply the thrust chamber with a high-pressure liquid hydrogen flow from the tank supply. This system, shown in the engine layout, Figure IV-B-1-1, consists of the tank shutoff valve, reactor cooldown valve, pump suction line, turbine power control valve, turbine bypass valve, remote disconnects, and the turbopump assembly. Currently the pump suction conditions are not well enough defined to permit inclusion of a boost pump as a possible part of the propellant feed system.

Energy for driving the pump is derived from the heat produced by the reactor and is converted to useful shaft work by a three-stage turbine directly coupled to the pump. Starting of the propellant-feed system is dependent upon the latent heat of the engine major components (reactor) and upon the driving potential (pressure) of the tanked hydrogen.

Control of the propellant feed system output is regulated by the turbine power control valve (turbine inlet throttle valve) and complete cessation during reactor cooldown of turbopump operation is accomplished by closing the turbine power control valve and bypassing turbine flow around the turbine. Turbine exhaust flow is ducted overboard via nozzles for thrust recovery and roll control.

Major mileposts to be accomplished during the next nine months are shown in the Technical Administrative Document, Section III, Volume II of this proposal.

a Tank Shutoff Valve, Cooldown Valve, and Remote Disconnect

(1) Tank Shutoff Valve

(a) Program Status

Development of this assembly was started during the initial phase of the program. At the end of Phase I a preliminary design of this valve assembly will have been completed. The first elements of the development effort, including leak, proof, and functional tests on an experimental valve, will have been initiated during Phase I.

(b) Critical Development Areas

The major development problem area for the tank shutoff valve will be the main shutoff seal, since sealing liquid hydrogen in a radiation environment, will require a definite advancement in the "state of the art." Because of the radiation environment, the use of organic seals is prohibited. To date, limited success has been obtained with hard-on-soft aluminum seals, A poppet-type design for this valve was chosen so that a high sealing force could be applied, and the design also provides that the shutoff seal can be easily changed to other configurations. The actuator is an integral part of the valve. Since the actuation fluid is also gaseous hydrogen, no particular effort will be made to maintain perfect sealing across the piston seal and the shaft seal. The valve has been designed with these dynamic sliding seals "upstream" of the poppet so that external or downstream leakage is not possible through these seals.

Another major problem area will be heat transfer from the actuating gas to the liquid surroundings. During operation this pressurant will require a continuous replenishment of the actuator gas. At the end of operation the "gas" in the actuator will be at the liquid temperature, but above critical pressure, as that during valve closure liquid will be formed in the actuation system due to the reduction in pressure. The exact effect of this on the valve operation will be evaluated by operational tests.

(c) Program Plan

During the program period, operational and environmental testing will be performed, as scheduled in Figure IV-B-2-1, on hardware fabricated during Phase I. It is expected that testing during this time will yield an answer to the major development problem, metal-to-metal shutoff sealing. Prototype hardware, in which the tank shutoff valve and disconnect will be an integral unit, will be fabricated during the program period, and preliminary testing will be initiated in August 1962. During the period from October 1962 to June 1963, operational and environmental tests will be performed with prototype hardware. These tests will provide information which will serve to differentiate between operational failures and be conducted by May 1963. The radiation effects will be conducted with LH_2 to determine the effect of radiation on the sealing surfaces of this valve. CITS tests will start in June 1963 as shown on the program planning network, Figure IV-B-2-2.

Following the engine test, most of the program will be devoted to design-improvement type of changes. The last part of the program will be devoted to testing for pre-qualification and reliability improvement, including tests conducted at the peripheral test conditions required for manufacturing, system storage, transportation, and operation, to determine failure points, safety margins, and life expectancy. Components for qualification testing will be chosen at random, whereas one phase of the reliability-improvement testing program will be devoted to testing components made up of parts manufactured and assembled to critical tolerance limits.

(2) Reactor Cooldown Valve

(a) Program Status

Investigation of this assembly was started during the Phase I program. Analysis to determine the cooldown flow rate for sizing the valve was completed. At the end of Phase I a preliminary design of this valve will have been completed.

(b) Critical Development Areas

Although valve sealing will be a problem area, a satisfactory solution will probably be obtained from the seal testing presently being conducted on the tank shutoff valve. In addition to the motor problems due to the poor resistance of elastomers and plastics in a nuclear environment, there is also the problem of bearing surfaces for the low-temperature hydrogen. Aerojet is presently working on a low-temperature (LH_2) electric motor for similar application on other programs.

(c) Program Plan

The development effort of the cooldown valve will be directed toward operational ability in the nuclear and low-temperature environment. Because of the nuclear environment, valve sealing will be metal-to-metal and a ceramic or a silicone-impregnated glass insulation will be used for the actuator motor windings and connectors. Aluminum wire will be substituted for copper to reduce the half-life of the motor assembly.

During the follow-on program, from January to September 1962, the cooldown valve will be designed and fabricated, and

preliminary developmental testing will be initiated during August and September. During the period of October 1962 through June 1963, the motor and valve assembly will be subjected to dynamic response, dry and wet cycle life, and environmental tests as illustrated in the test schedule of Figure IV-B-2-1. CITS tests will start in June 1963 as shown in Figure IV-B-2-1. No major difficulty is anticipated in providing hardware for the first engine test in March 1964, although backup pneumatic actuators will be investigated. Following the engine test, design improvements will be incorporated to fix any weaknesses uncovered by the engine test. The last part of the program will be devoted to testing for pre-qualification and reliability improvement.

(3) Remote Disconnect

(a) Program Status

At the completion of Phase I a preliminary design of the remote disconnect will have been completed. A conceptual design of a remote disconnect is shown in Figure IV-B-2-3.

(b) Critical Development Areas

The major problem area of the disconnect will be its sealing and alignment, which are particularly important due to the large diameter (18 in.) of this disconnect. Metal-to-metal sealing will again be a problem, although repeated operation such as required by the shutoff seal of the valve, is not a requirement for the disconnect.

(c) Program Plan

During the program extension, the tank shut-off valve and remote disconnect will be integrated into a common assembly. Prototype hardware will be fabricated and preliminary testing will be initiated in August 1962. Operational and environmental testing will be performed during October 1962 to June 1963. Side-by-side testing will be conducted in May 1962. CITS tests will start in June 1963.

b. Turbopump Assembly

(1) Program Status

The third-generation turbopump layout, installation, detail, and assembly drawings will have been completed during the Phase I program. Operating capability of this unit embraces all temperature and hydraulic environments of the heated and hot-bleed cycles.

IV Technical Discussion, B (cont.)

A review of NASA and Aerojet hydrogen pump cavitation data was made, and results were compared and analyzed. A thermodynamic analysis was made in an attempt to explain the difference between water and hydrogen tests, and resulting conclusions were utilized for the design of the inducer of the improved third-generation impeller.

During the Phase I program, 24 pump cavitation tests will have been conducted with LH_2 liquid hydrogen in the second-generation (oil lubricated bearings) turbopump. Both second- and third-generation impeller will be tested in the pump tests. Early testing indicates that satisfactory pump operation may be possible at NPSP values approaching zero.

Fourteen water, and 18 hydrogen tests have been run during Phase I to obtain data on non-cavitating head rise vs capacity, efficiency, and cavitating performance. Testing was accomplished on both the second- and third-generation pump impellers.

Pump power for the water tests was supplied by an electric motor. Pump speed and suction pressure were maintained at constant rates during the non-cavitating test; speed and pump flow rates were held constant, while the suction pressure was lowered to obtain the cavitating performance data. Pump speed was limited due to available drive power; however, the pump was operated over the full specific speed operating range at speeds up to 5000 rpm. The pump demonstrated cavitation performance up to 30,000 suction specific speed with water.

The pumps used for the hydrogen tests were driven by the three stage NERVA turbine. The bearing housing was oil lubricated and electric resistance heaters maintained the oil temperature above its freezing point.

Turbine testing at the NASA Lewis Research Center will be completed during the Phase I program.

(2) Critical Development Areas

The major critical development area in designing and developing a turbopump assembly for the NERVA engine is the radiation environment and its effect on bearings and the propellant conditions at the pump inlet. Because the bearings are considered to be a major development

area they are treated separately under Item 5 of the propellant feed system discussion. The problem of pumping a boiling liquid which is further complicated by the heat addition from nuclear radiation is a critical area in developing the pump.

(3) Program Plan

Turbopump testing will continue during the program extension as shown on the program planning network, Figure IV-B-2-2. These tests will be performed using both the second- and third-generation turbopump assemblies in order to attain a design for the E-engine tests in 1964. Nineteen turbopump assembly tests will be conducted during the period of January 1962 through 30 September 1962, utilizing five complete (new) turbopump assemblies.

Interaction of the turbopump with the engine system will have been evaluated by analytical means, using a computer. Turbopump will be tested in conjunction with the engine simulator to confirm computer-predicted system performance. Initial testing will be performed using the second-generation turbopump, and the third-generation turbopump will be used in the simulator tests following demonstration of development. The second- and third-generation turbopump are functionally identical, differing only in the method of bearing lubrication and cooling.

The second-generation turbopump is a development vehicle which will be used in initial development of the pump with improved suction performance, the pump with reduced axial thrust, and the three-stage turbine. Use of the second-generation turbopump will permit developmental testing of the pump and turbine components at rated conditions prior to the demonstration of development of liquid hydrogen-cooled bearings.

The third-generation turbopump will be the prototype configuration. The turbopump will be tested with pump and turbine components which were initially tested on the second-generation development vehicle. Development of the third-generation turbopump will be achieved by testing and evaluating the interactions between the pump, the LH_2-cooled bearings, and the turbine.

The turbopump tests, in addition to evaluating pump and turbine performances, will be instrumented to evaluate the bearing performance under the actual operating conditions. With regard to interaction of the bearing coolant flowing between intermediate pressure areas of the pump and turbine bearing temperature, total bearing LH_2 coolant flow will be

recorded. Bearing loads will be calculated from pressure gradient measurements on the pump, and bearing coolant flow ratio will be evaluated to establish minimum requirements and safe operating values.

Safety aspects of the turbopump assembly will be investigated, such as would be related to overspeed shutdowns, loss of NPSP, and malfunctions of the tank shutoff valve, turbine power control valve, and turbine bypass valve.

Developmental efforts will be continued during the program period to evaluate the thrust-balancing characteristics of the impeller back vane. Variables to be evaluated will include repelling vane height, number, length, and running clearance. Data from the tests will be evaluated and used to establish the optimum back-vane configuration to minimize thrust forces.

Evaluation of various back vane configurations will be accomplished by using one impeller which will have provisions for attaching a plate with any desired back vane configuration. Since water tests will be conducted at low speed, the mechanical attachment of a plate with repelling vanes provides a direct method of evaluating various repelling vane configurations with minimum cost. Strain-gage-instrumented thrust-fixture data will be correlated with the pressure gradient as measured on the housing walls and on either side of the impeller. Thrust data using hydrogen will be computed using the measured pressure profile over the impeller and its correlation with the water strain gage thrust readings.

Pump performance testing will be done with both water and hydrogen using electric-motor-driven and turbine-driven pumps. Testing will continue through June 1963 when a total of 44 will have been completed. Of these tests, 8 will be completed by 30 September 1962. The motor-driven pumps will be used to cover the full specific speed range of the pump, while also obtaining data on efficiency through the temperature rise across the pump and the required electric power. Pump test data will be evaluated and compared with test data obtained during Phase I.

Full-speed-performance evaluation of the pump will be conducted with the second-generation turbopump using LH_2 as a test fluid. Tests will be conducted to evaluate low-suction-pressure characteristics of the turbopump, axial thrust during start and steady-state operation, pump head, efficiency, and turbine-performance characteristics using GH_2 at

ambient temperature as the drive source for the turbine. Hydrogen pump data will be evaluated and compared with data derived from water tests to establish performance correlation.

The third-generation turbopump will be initially tested at an intermediate speed (16,000 to 20,000 rpm) to evaluate the interaction of the LH_2-bearing coolant flow on the pump impeller thrust, this test will be conducted in conjunction with low suction pressure testing, and results will be evaluated to establish the capabilities of pump operation at design speed (21,000 to 22,000 rpm). The turbopump will be operated at design speed to provide evaluation at rated conditions, incorporating bearings which have demonstrated the most promise in the bearing-test program.

A program will be conducted to investigate possible turbopump speed sensing devices. Devices to be investigated will include (but are not necessarily limited to) tachometer generators which do not require a signal amplification. However, tachometer generators currently in use are potted with materials unsuitable for operation in a radiation environment.

Remote disassembly procedures for the turbopump assembly will be analyzed, remote handling aspects will be designed into the assembly. In addition, handling tabs and holding fixtures will be evaluated during the extension program.

The turbopump windmilling flow rate during reactor cooldown will be determined by analysis and experiment during the extension program. Data obtained will be used to determine the permissible leakage flow through the turbine power control valve as well as to supply information for sizing the turbine bypass valve.

Turbopump assemblies will be evaluated to select the most reliable design for the NERVA engine. Factors to determine reliability, performance, and compatibility with the engine design will be established. Also, experimental data will be obtained for component and engine simulator tests.

c. Bearings

(1) Program Status

Pre-irradiation bearing testing with gaseous and liquid hydrogen has been initiated at the Aerojet Sacramento test facility. The

test rig, shown in Figure IV-B-2-4, was a prior Aerojet design modified to utilize LH_2 in the test head. Oil lubricated bearings (not test bearings) are used to carry the driving shaft. Original design features of this tester limited speeds to 16,000 rpm or about 75% of the NERVA turbopump design speed. Tests were run at axial and radial combined loads up to 2000 lb.

Specially fitted bearings utilizing 52100 and 440 C stainless steel for balls and races and silver-lead plated iron-silicon-bronze cages were operated in two environments: (1) with a drip-dry film of MIL-L-7808 oil, and (2) in a super clean and dry condition. A total of 45 tests have been conducted. The 52100 steel bearing used in these tests is shown in Figure IV-B-2-5.

A high-speed vertical shaft bearing tester is being designed for testing turbopump bearing to 32,000 rpm and 5000 lb axial and radial loads. This tester will utilize gaseous and liquid hydrogen for bearing coolant. It will be suitable for irradiation testing in the CITS facility.

To expedite experience with hydrogen-cooled ball bearings under irradiation operating conditions, an interim high-speed tester has been designed. It consists of a third-generation NERVA turbopump bearing housing utilizing one pair of pre-loaded ball bearings, to be driven by an electric motor at NERVA turbopump operating speeds.

(2) Critical Development Areas

The major development area in the selection of bearings for the NERVA turbopump will cover the effects of sliding contact in a radiation environment at cryogenic temperatures. Even if only lightly loaded, hot spots may arise in the bearings due to insufficient cooling and the combination of friction and radiation heating. Galling and wear are expected to be severe problems with hydrogen as lubricant.

There are two approaches to the problem of sliding contact. One is to select cage materials that will tolerate sliding in a hydrogen atmosphere, the other is to design bearing configuration that eliminates sliding. In the absence of reliable friction coefficients, wear, and galling data for materials in a hydrogen atmosphere, cage material selections have been based on extrapolated data. Bearings having metallic cages are currently under investigation. Metallic cages are expected to be radiation resistant.

A study of conventional rolling-contact bearing geometry reveals that it is theoretically possible to replace the cage with a system of rolling separators and eliminate the sliding that usually takes place at the cage contact surfaces. This has been done at Aerojet. Figure IV-B-2-6 shows a cageless rolling contact bearing currently under investigation.

(3) Program Plan

Bearing testing performed during Phase I with the intermediate-speed bearing tester will continue through June 1962 (see Figure IV-B-2-1). The intermediate speed tests will be performed to evaluate bearings made of materials believed to be radiation resistant. Bearings demonstrating the most promise during intermediate speed tests will be further evaluated during high-speed bearing tests. The high-speed tests will be conducted at the anticipated radial and axial loads and temperature, starting in July 1962. The bearing development program will be directed toward evaluating the effects of materials, clearances, load, and speed on bearing life. Results of the testing will be reviewed to establish a bearing system capable of supporting the turbopump rotating components at the design speed and load. These tests will continue through June 1963.

Side-by-side bearing testing will be performed to evaluate radiation effects on bearings operating at cryogenic temperatures. Initial irradiation tests in May 1962 will be performed with bearings operating at design speeds and low axial loads only. The initial tests to be performed using the interim high-speed bearing tester will define possible problem areas and establish experience in operating a bearing tester in an irradiation environment.

Irradiation bearing tests will also be performed at design axial and radial loads with the high-speed bearing tester in the CITS facility Irradiation testing of bearings will be conducted on bearings showing the greatest promise during the non-irradiation high-speed bearing test series.

d. Boost Pump

(1) Program Status

The boost pump is included in the program to insure engine operating capabilities, should the NPSP value available to the main pump be too low for proper pump operation. A design analysis and preliminary layout was prepared for boost-pump systems using mechanical

and hydraulic drive during the Phase I program. A conceptual line-mounted, gear-driven boost pump design is shown in Figure IV-B-2-7.

(2) Critical Development Areas

The critical areas in designing and developing a boost pump for the NERVA engine are a result of the radiation environment in which the pump must operate. The greatest effect that the radiation environment has on the pump is in the development of bearings and gears.

(3) Program Plan

The boost pump design will be finalized during the program extension, however, no fabrication or testing is to be performed.

e. Pump Suction Line

(1) Program Status

The design features and preliminary design of the pump suction line will have been established during the Phase I program. Testing will have been conducted, and data will have been obtained to permit an optimum inlet line flow geometry. Additional analysis of optimum designs will be performed to integrate this line in the most suitable manner consistent with the adjoining engine components.

(2) Critical Development Areas

The pump suction line, Figure IV-B-2-8, must be capable of providing design flow with a flow gradient amenable to efficient pump operation while maintaining the capability of elastic flexing to accommodate the angular engine freedom required by the thrust-vector control system. It must also be capable of transmitting inertial and thrust loads to and from the engine-to-gimbal and the gimbal-to-tank thrust structures, and providing for suction line dimensional changes due to temperature variation. The necessity of meeting these requirements concurrently with providing a sealed flow passage under the engine operating environment is indicative of the development effort required to design this component.

(3) Program Plan

During the program extension, the pump-suction line will be tested on the Generation II engine simulator. As data becomes available, the line will be modified as required, and will be proof, leak, and

functionally tested. In addition, results of tests and analyses from various agencies concerning propellant-thermal behavior during expulsion from a vehicle tank will be applied to the improved design of the pump-suction line.

The improved pump-suction line will be utilized in the CITS tests as a part of the propellant feed system as shown on the program planning network diagram, Figure IV-B-2-2.

f. Turbine Power Control and Bypass Valves

(1) Program Status

The turbine power control valve (TPCV) and bypass valves are required to properly control the flow of hydrogen to the turbine. Development of these valves and actuator (Bendix), which are identical with the exception of size, is currently in progress, and preliminary development testing will have been completed on the experimental versions with a single actuator during Phase I.

(2) Critical Development Areas

The major development problem area for these valve assemblies will be shutoff sealing in high-temperature operation with radiation environment. Although the minimum lip sealing requirements for the TPCV are not as severe as for the tank shutoff valve, it is still critical because of the necessity for prevention of the windmilling of the turbopump. Furthermore, at high temperatures corresponding to high engine operating levels, torque requirements increase so that the valve response rate tends to deteriorate unless compensated for by design. Prior success with a two-way poppet valve on the Titan-I engines, which operated at 1350°F, impels the conviction that a similar development plan will allow the target date of March 1964 for E-engine firing to be met with no difficulty.

(3) Program Plan

During the follow-on program, from January to September 1962, as shown on the network schedule, Figure IV-B-2-2, operational and environmental testing will be performed on the TPCV as scheduled in Figure IV-B-2-1, using hardware fabricated during Phase I. In the radiation effects test(s), the valve and actuator will be caused to function in a gaseous environment. Prior to the radiation effects testing, a blade configuration to satisfactorily meet torque requirements will be developed.

Fabrication of prototype hardware will be completed in June 1962 and initial development testing will be conducted on the individual units during July to September 1962. During the period October 1962 to June 1963, the full assembly will be subjected to dynamic response, cycle life, and environmental tests. Additional nuclear environmental testing will be performed in June 1963 with CITS. Following the March 1964 engine test, design improvements will be incorporated as required. The remainder of the program will be devoted to testing for pre-qualification, qualification, and reliability improvement.

g. Seals and Flange Assemblies

(1) Program Status

By the end of Phase I, initial development testing will have been conducted on various types of metallic seals. A standardized gland configuration will have been devised for anticipated types of seals.

(2) Critical Development Areas

The major problem area will be external leakage, together with ease of assembly and disassembly of the flange connection. Another major problem area is the variation in seal-gland dimensions among manufacturers, which is presently being overcome by establishing standard gland sizes to which all seals will be manufactured. It is believed that through a normal development effort the static sealing problems can be overcome.

(3) Program Plan

Various seals and flange assemblies will be procured and evaluated during the program extension. Testing will consist mainly of proof, leak, and pressure-cycling tests using nitrogen, helium, and hydrogen as test media. The latter part of the program will emphasize hydrogen testing at the exact operating conditions but without radiation environment. Side-by-side testing of flange and seal configurations will be accomplished in May 1962, as shown in Figure IV-B-2-1.

Radiation testing of seals will be accomplished in July 1963 during the CITS program tests. The test program for this task is presented in Figure IV-B-2-2, the Program Planning Network.

COMPONENT/SUBASSEMBLY TEST SCHEDULE
PROPELLANT FEED SYSTEM (TASK ITEM 1.2)

Component or Subassembly	Config. No. or Series	Test Objective	Facility	No. of Tests 1962 J	F	M	A	M	J	J	A	S	O	N	D	No. of Tests 1963 J	F	M	A	M	J	J	A	S	O	N	D	Total
Bearings — TPA and BPA	Series 1	Evaluate bearings for operation in LH_2 for use in TPA and BPA. Intermediate speed up to 16,000 rpm and loads to 5000 lb — radial and/or axial.	LRP Area G-7	3	3	3	2	2	3																			16
Bearings — TPA and BPA	Series 2	Evaluate bearings selected from Series 1 testing to be tested in high speed tester at speeds to 32,000 rpm and loads to 5000 lb, radial and/or axial. LH_2 cooled, non-radiation environment.	Cryogenics							3	3	3	15	20	25	20	20	25	25	15	15							189
Bearings — TPA and BPA	Series 3	Checkout tests of side-by-side special test rig — simulated bearing housing at design speed. Axial load only. LH_2 lubricated.	LRP Area G-7			5	5																					10
Bearings — TPA and BPA	Series 3	Side-by-side tests to evaluate radiation environment effects at design speed and axial loads only — LH_2-cooled.	NTS					1																				1
Pump	Series 1	Water tests to establish optimum thrust balance at speeds ranging from 3000, 4000, 5000 rpm and flow rate range of 50 to 150% Q.	LRP Area D-3		2		1						4	2	2	2	2		4	4	1							24
Pump	Series 2	Performance evaluation to establish head-capacity characteristics over fuel flow range at increasing and decreasing flow and cavitation varying from noncavitating head to cavitating head.	LRP Area C-6B			1		2		2			2		2	2	2	4										17
Pump	Series 3	Performance optimization and evaluation of performance capabilities of hardware selected from Series 1 and Series 2 testing.	LRP Area C-6B																		3							3
Turbopump Assembly	Series 1 Gen. 2	Establish performance characteristics of turbopump assembly at design speed under conditions of nominal and low values of suction pressure.	LRP Area C-6B	3		3																						6

Fig. IV-B-2-1 (Sheet 1), Vol. I

COMPONENT/SUBASSEMBLY TEST SCHEDULE (Continued)
PROPELLANT FEED SYSTEM (TASK ITEM 1.2)

Component or Subassembly	Config. No. or Series	Test Objective	Facility	No. of Tests 1962 J	F	M	A	M	J	J	A	S	O	N	D	No. of Tests 1963 J	F	M	A	M	J	J	A	S	O	N	D	Total
Turbopump Assembly	Series 1 Gen. 2	Establish performance characteristics using LO_2-LH_2 gas generator. Turbine speed 22,000 rpm, inlet temperature 1300°F, inlet pressure 500 psia.	LRP Area C-6B										4*	2	2													8
Turbopump Assembly	Series 1 Gen. 3	Demonstrate performance characteristics in conjunction with LH_2-lubricated bearings at 16,000 to 20,000 rpm and 5 to 40 lb of suction pressure.	LRP Area C-6B							2	2	2	6	8	10	10	10	5*	2*	2								59
Turbopump Assembly	Series 2 Gen. 3	Bearing evaluation — establish performance characteristics of bearings at design speed and flow conditions.	LRP Area C-6B						2	1	2	1	2	2	2	15	15	20	20	10								92
Tank Shutoff Valve	Series 1	Initial development testing to evaluate functional aspects of design — proof, leak rate, response, and endurance (life).	Controls and Cryogenics Lab	30	30	30	30	30	30	30																		210
	Series 2	Refinement of design — tests to evaluate functional aspects of design — proof, leak rate, response, and endurance.	Controls and Cryogenics Lab								30	30	30	30	30	30	15	15	30	20	30							290
	Series 2	Demonstrate operating and endurance capabilities including cycle life, leak and response.	Controls and Cryogenics Lab	4	10	10	8																					32
	Series 2	Determine and evaluate valve flow characteristics with water and LH_2 yielding flow vs ΔP at various poppet positions.	Controls and Cryogenics Lab			3		3					3				3											12
	Series 2	Environmental — expose to thermal soak, thermal shock, vibration, etc., to demonstrate integrity.	Controls and Cryogenics Lab		4	6	6							4	6	8	8	8	10	8	6							74
	Series 2	Side-by-side test with Kiwi-B and CITS to determine radiation effects regarding leakage and response.	NTS					1											1	1	1							4

*Gas farm driving fluid.

Fig. IV-B-2-1 (Sheet 2), Vol. I

COMPONENT/SUBASSEMBLY TEST SCHEDULE (Continued)
PROPELLANT FEED SYSTEM (TASK ITEM 1.2)

Component or Subassembly	Config. No. or Series	Test Objective	Facility	No. of Tests 1962 J F M A M J J A S O N D	No. of Tests 1963 J F M A M J J A S O N D	Total
Cooldown Valve	Series 2 Valve	Initial development testing to evaluate valve design and to determine actuator requirements and operating characteristics — torque, flow coefficients and functional aspects — proof and leak.	Controls and Cryogenics Lab	30 30 20 10 10		100
	Series 2 Actuator	Initial development testing to evaluate actuator capacity — loaded and unloaded operational characteristics — dynamic response and life.	Controls and Cryogenics Lab	30 30 20 10 10		100
	Series 2 Valve and Actuator	Initial development testing to evaluate functioning as integral assembly — dynamic response, leak rates, life.	Controls and Cryogenics Lab	10 10 10	10 10 5 30 20 20	125
	Series 2 Valve and Actuator	Demonstrate operational and endurance capabilities — response, leak rates, life cycle.	Controls and Cryogenics Lab	4 8	8 6 6	32
	Series 2	Determine and evaluate valve flow characteristics with water and LH_2 yielding flow vs ΔP at various poppet positions.	Controls and Cryogenics Lab	3	3	6
	Series 2	Environmental — expose to thermal soak, thermal shock, vibration, etc., to demonstrate integrity.	Controls and Cryogenics Lab	4	8 8 6 10 8 6	50
	Series 2	Side-by-side tests with Kiwi-B and CITS to determine radiation effects regarding leakage and response.	Controls and Cryogenics Lab	1	1 1 1	4
Turbine Power Control Valve	Series 1	Initial development testing to evaluate design and to determine actuator requirements and operating characteristics — torque, flow coefficients, and functionsl parameters (life, proof, and leak).	Controls and Cryogenics Lab	20 20 20 20 20 20 20		140
	Series 2	Refinement of design — tests to evaluate functional aspects of design — proof, leak rate, response, and life.	Controls and Cryogenics Lab	30 20 20 10 10	5 5 5 30 20 20	175

Fig. IV-B-2-1 (Sheet 3), Vol. I

COMPONENT/SUBASSEMBLY TEST SCHEDULE (Continued)
PROPELLANT FEED SYSTEM (TASK ITEM 1.2)

Component or Subassembly	Config. No. or Series	Test Objective	Facility	No. of Tests 1962 J	F	M	A	M	J	J	A	S	O	N	D	No. of Tests 1963 J	F	M	A	M	J	J	A	S	O	N	D	Total
Turbine Power Control Valve (cont.)	Series 2	Demonstrate operating and endurance capabilities including cycle life, leak rate, and response.	Controls and Cryogenics Lab	10	6	6	6	4	4	4	4	4	10	10	4	4												76
	Series 2	Determine and evaluate valve flow characteristics with gaseous N_2 (or air) and gaseous H_2 yielding flow vs PO/PN at various blade positions.	Controls and Cryogenics Lab		2	2					2	2																8
	Series 2	Environmental — expose to thermal soak, thermal shock, vibration, humidity, salt spray, etc., to demonstrate integrity — leak rate, response, and life.	Controls and Cryogenics Lab		4	6	6							6	6	8	8	6	10	8	6							74
	Series 2	Radiation effects — side-by-side and CITS to determine effects regarding leakage, response, and life.	NTS					1													1	1	1					4
Turbine Bypass Valve	Series 2	Initial development testing to evaluate valve design and to determine actuator requirements and operating characteristics — torque, flow coefficients, response, and cycle life.	Controls and Cryogenics Lab						30	30	30	20																110
	Series 2	Determine and evaluate valve flow characteristics with gaseous N_2 (or air) and GH_2 at various valve opening positions — yielding flow vs ΔP.	Controls and Cryogenics Lab								2		20	10	10	5	5	5	30	20	20							127
	Series 2	Determine and evaluate valve flow characteristics with gaseous N_2 (or air) and gaseous H_2 yielding flow vs PO/PN at various blade positions.	Controls and Cryogenics Lab									2																2
Seal Assemblies	Series 1	Initial development testing for selection of satisfactory seal design — leak and proof tests.	Controls and Cryogenics Lab	40	40	40	40																					160

Fig. IV-B-2-1 (Sheet 4), Vol. I

COMPONENT/SUBASSEMBLY TEST SCHEDULE (Continued)
PROPELLANT FEED SYSTEM (TASK ITEM 1.2)

Component or Subassembly	Config. No. or Series	Test Objective	Facility	No. of Tests 1962 J F M A M J J A S O N D	No. of Tests 1963 J F M A M J J A S O N D	Total
Seal Assemblies (cont.)	Series 2	Evaluation of refinements for prototype design leak at proof pressures.	Controls and Cryogenics Lab	40 40 40 40 40 40 40		280
	Series 2	Radiation effects — side-by-side tests Kiwi-B.	NTS	3		3
Remotely Disconnected Flanges	Series 1	Initial development testing for selection of satisfactory designs — leak and proof tests.	Controls and Cryogenics Lab	20 20 20		60
	Series 2	Evaluation of refinements for prototype design leak and proof tests.	Controls and Cryogenics Lab	20 20 20 20 20 20 20 20 20 20		200
	Series 2	Operational endurance and functional life tests — cycling and environmental tests (nonradiation).	Controls and Cryogenics Lab	12 16 16 16 12 12		84
Remotely Actuated Flanges	Series 1	Initial development testing to evaluate functional capabilities — proof, leak, and functional tests.	Controls and Cryogenics Lab	10 20 20 20 20 20	20 20 10 20 20 10	210
	Series 2	Operational endurance tests — cycle life, leak, and proof tests.	Controls and Cryogenics Lab	25 35	35 35 25 25 25	205
	Series 2	Environmental tests — vibration, thermal shock and soak, leak, and determine flow characteristics.	Controls and Cryogenics Lab	6	6 6 6 10 10 8	52
	Series 2	Side-by-side tests in conjunction with Kiwi-B and CITS.	NTS		1 1 1	3

Fig. IV-B-2-1 (Sheet 5), Vol. I

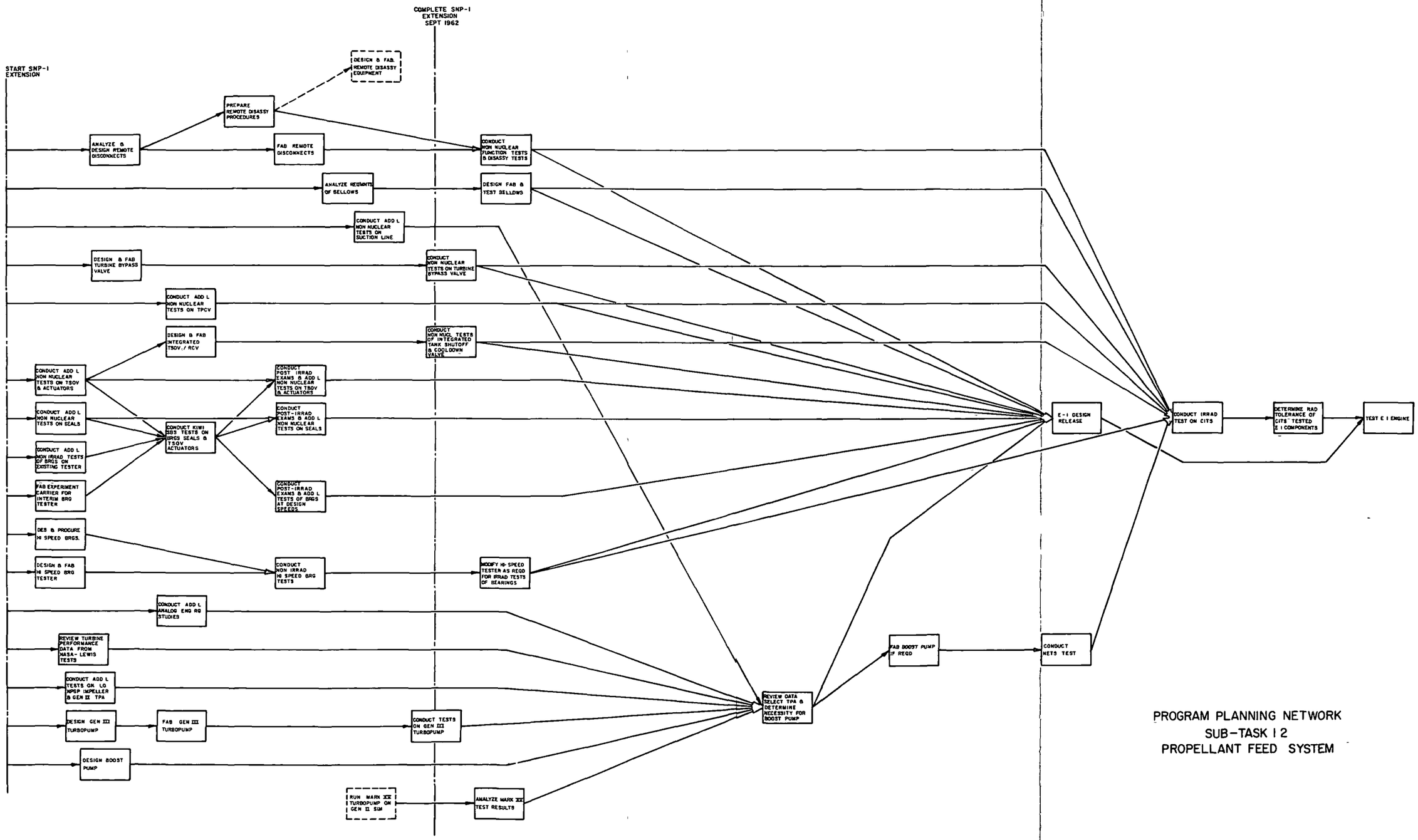

PROGRAM PLANNING NETWORK
SUB-TASK I 2
PROPELLANT FEED SYSTEM

Fig. IV-B-2-2, Vol. I

REMOTE DISCONNECT CONCEPT

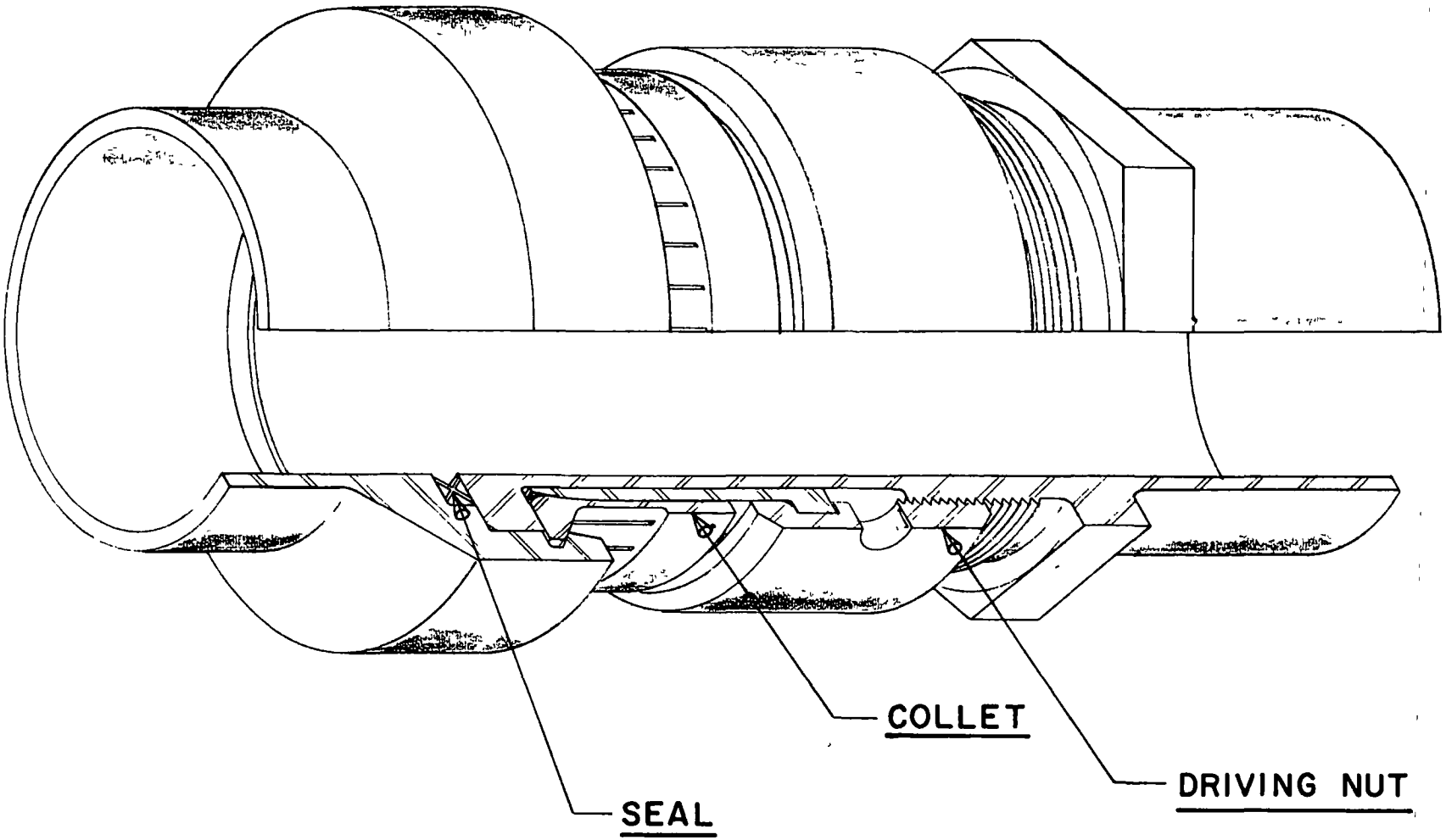

Fig. IV-B-2-3, Vol. I

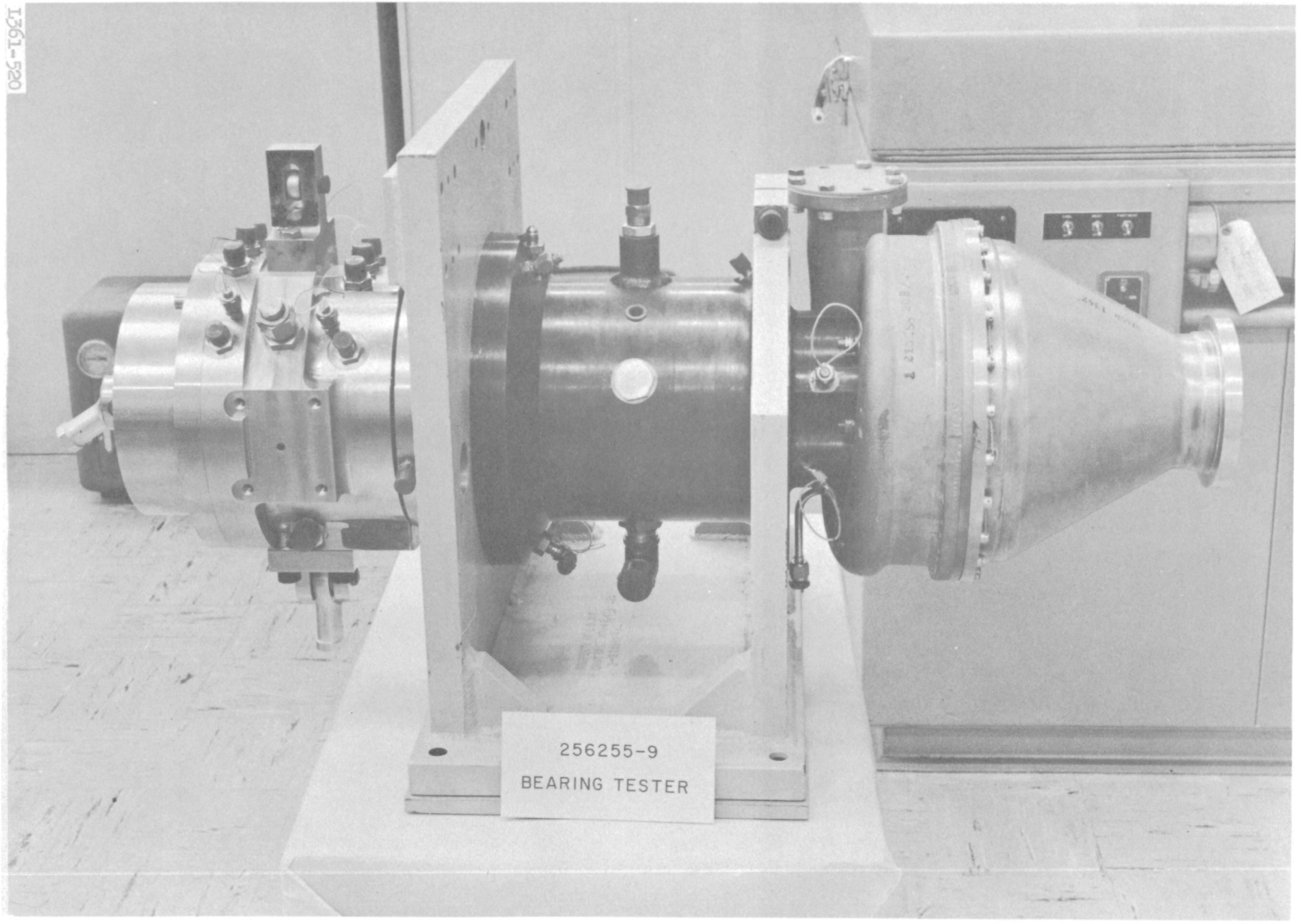

Bearing Test Rig

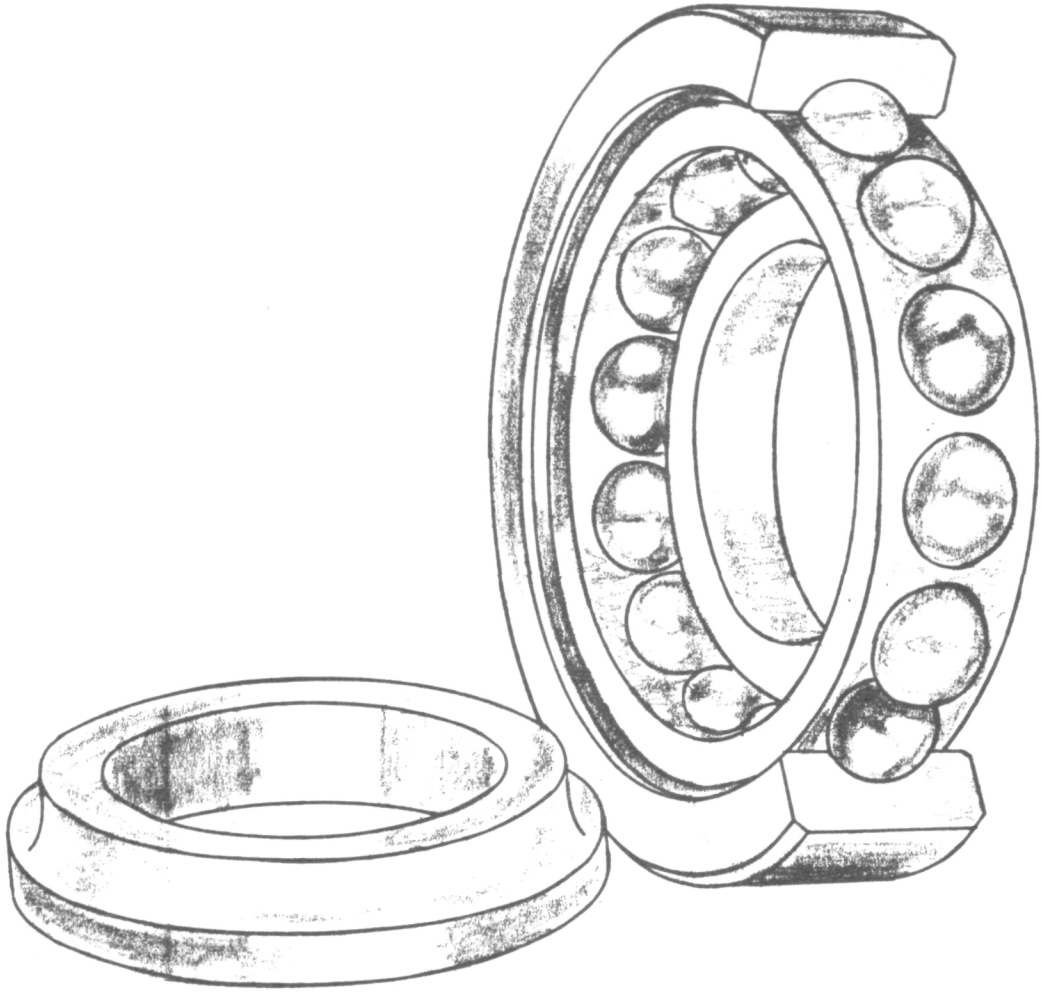

52100
STEEL BEARING

Fig. IV-B-2-5, Vol. I

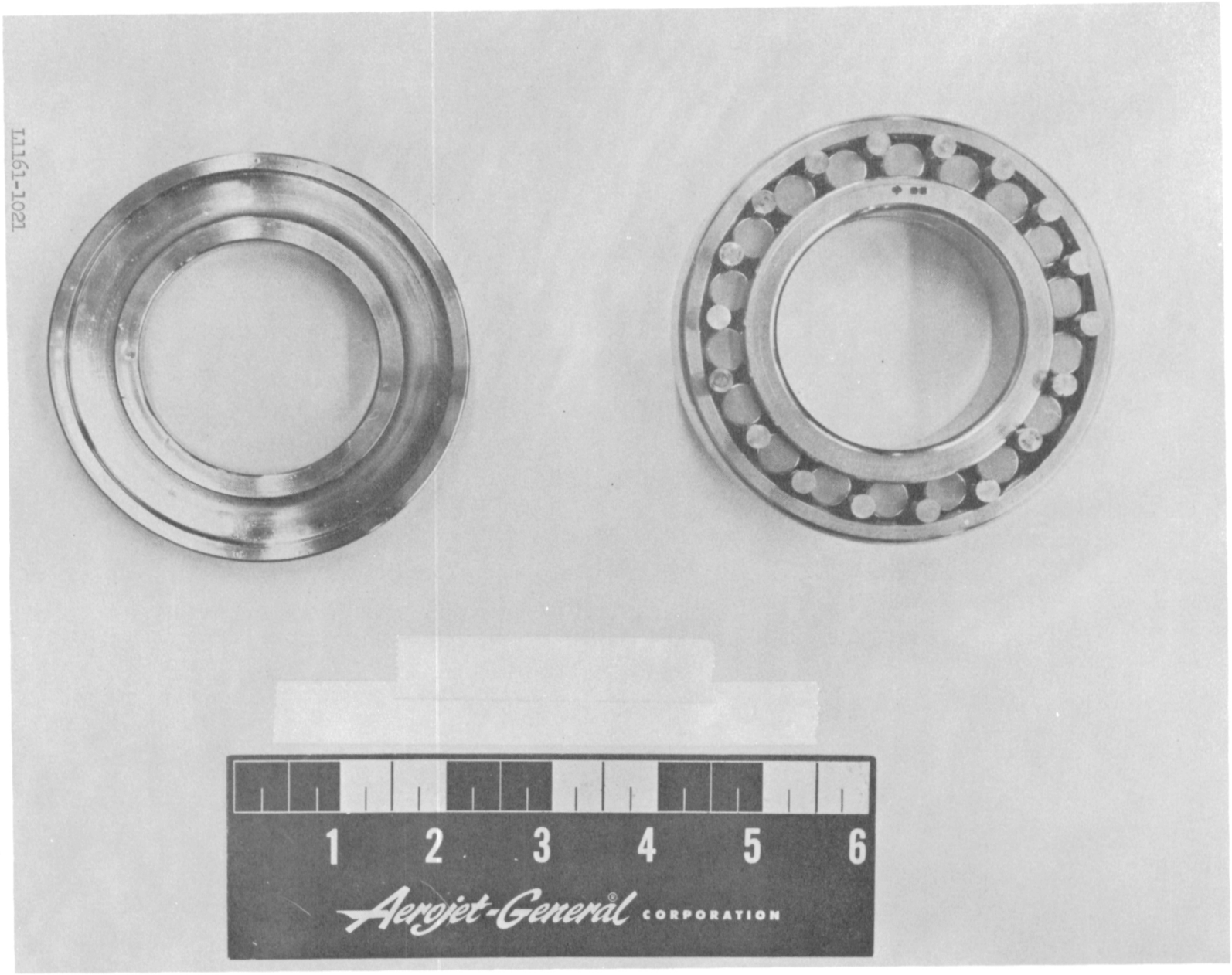

E1161-1021

Cageless Bearing

BOOST PUMP
GEAR DRIVEN-LINE MOUNTED

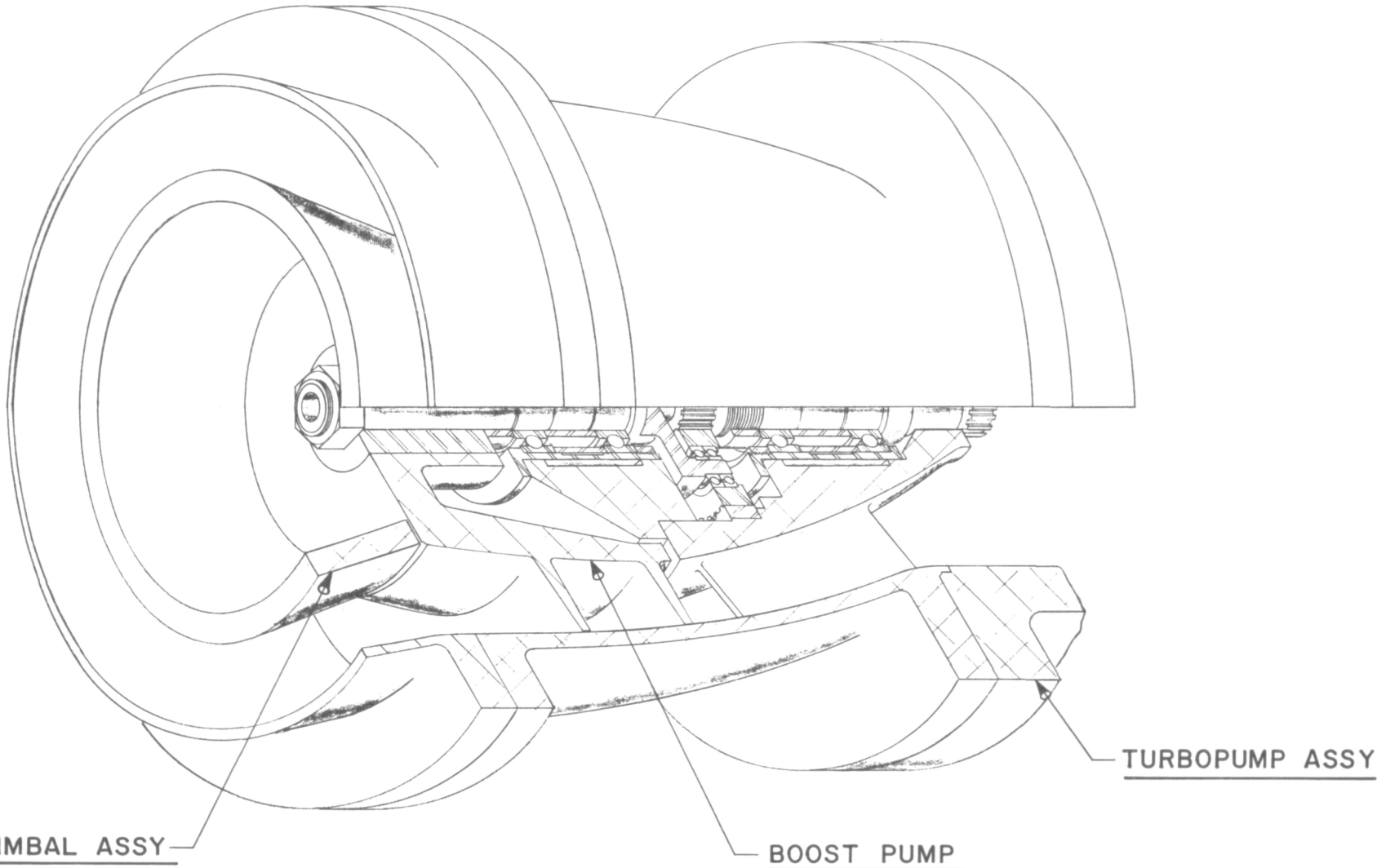

Fig. IV-B-2-7, Vol. I

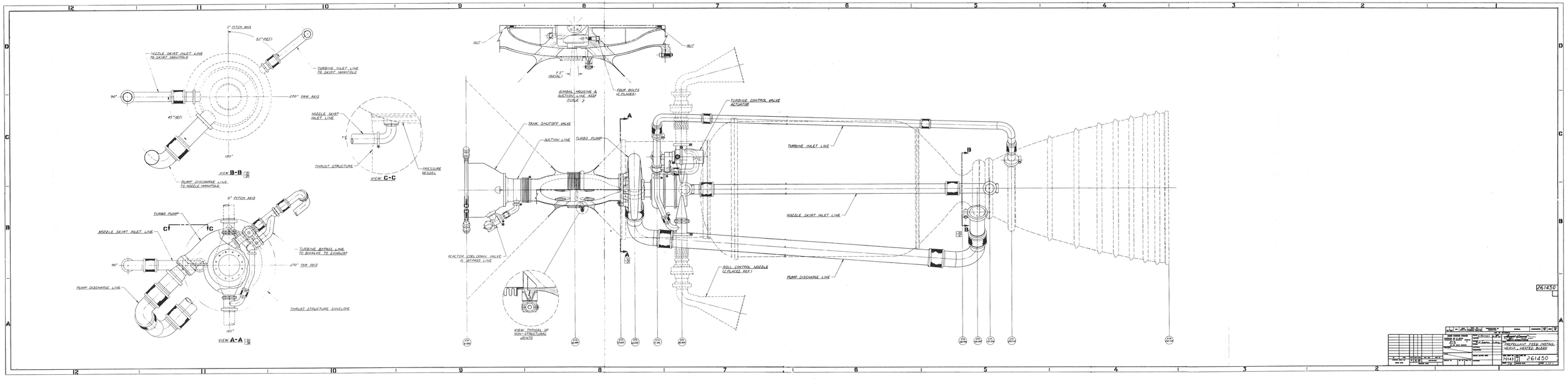

Fig. IV-B-2-8, Vol. I

3. Reactor Subassembly

The reactor subassembly consists of the reactor core and internal support structures, the reflector and reactor control elements (drums), radiation shielding within the pressure vessel, and such components of a destruct system as may have to be accommodated within the reactor subassembly. Also, for purposes of project organization, the reactor control loop, which includes the drum actuators, neutron sensors, other electronic components, and the electrical harnesses for these items, is considered a part of the reactor subassembly. Fundamental experimental programs conducted at LASL under the ROVER program (Kiwi-A series) have demonstrated the basic feasibility of a graphite-moderated, hydrogen-cooled reactor for rocket propulsion. Continuing development and experiments of the Kiwi-B series will provide the basic technology and engineering data upon which the design of the NERVA reactor assembly will be used. The principal engineering and development problems in this task are the adaptation of the LASL technology to a flight environment and the integration of those design features necessary to an engine-vehicle system.

Three reactor-core structural concepts (Kiwi-B-1, B-2, and B-4 of the LASL test series) are being considered for use in the NERVA system. A tentative selection will be made following the operation of the various configurations with liquid-hydrogen propellant. The reactor will be required to operate for a single full-power cycle of 300 sec at full rated propellant-outlet temperature. Each type of reactor that passes this requirement will be considered a candidate for tentative selection, on the basis of success in testing in the following categories: (a) that there shall be no major failure of the reactor, (b) that mechanical damage found in postoperative inspection shall be minor, and can be analyzed, understood, and solved, and (c) that the reactor shall operate satisfactorily under testing in terms of the observable data.

The program plan (depicted in the Program Planning Network, Task 1.3, Figure IV-B-3-1) is premised on the basis that these tests will have been completed by July 1962 and that at least one of the candidate reactors has passed the test. If more than one of the designs is satisfactory, a tentative choice will be made on the basis of other factors (adaptability to flight design, reliability assessment, growth potential, etc.).

The tentatively selected reactor will be required to pass additional verification tests, including two additional reactor tests. One test will require operation for a minimum of two full-power cycles at full rated temperature with complete shutdown between cycles. The second test

will require that the reactor pass certain transient tests, including several relatively rapid startups and transient operation in the power range, followed by a scram shutdown. The satisfactory completion of these tests will be judged in the same manner as for the tentative selection. Two separate reactors will be used for these tests to enhance the interpretability of post-operative inspection.

When these verification tests have been successfully completed, the successful candidate will be adopted as the selected design for the NERVA flight engine. It is expected that these verification tests can be completed by November 1962, permitting the release of the flight-design reactor for fabrication at that time.

Concurrently with the Kiwi-B test series, through 30 June, 1962, studies will be conducted on each of the candidate reactor designs to adapt them to flight versions.* During the second half of 1962, the detail design for flight operations of the tentatively selected reactor will be developed preparatory to release for fabrication by November 1962. In general, the necessary reactor modifications and developments required for the flight engine will be as follows:

a. A radial, mechanical-restraint system designed to protect the core from mechanical damage during booster operation and ground handling

b. Incorporation of a shield within the pressure vessel to reduce radiation heating of the propellant in the tank to a tolerable level (Figures IV-B-2 and IV-B-3 illustrate the neutron and gamma fluxes around the shielded NERVA engine.)

c. Such modifications of the nuclear and thermal design as will be required by the mechanical modifications

d. Mechanical-design features to permit integration of the reactor in the pressure vessel for the engine assembly and remote disassembly required during the testing program

e. Reactor-control-system development involving the principal problems of control-rod (drum) actuators, neutron sensors, and the reactor inner-control-loop system compatible with the flight-environment radiation and the remainder of the engine-control system

*Figures IV-B-3-4 and -5 illustrate the major features of two reactor concepts to adapt them to flight environmental loads.

IV Technical Discussion, B (cont.)

f. Other details of structure, materials, and mechanical-tolerance specifications as will be required to increase the reliability of continued and multiple-cycle power operation and to accommodate reactor-engine integration requirements.

The status of development of the reactor subassembly on 10 January will include preliminary designs for shielded reflector assemblies compatible with any of the candidate reactor designs; the preliminary definition of the reactor-subassembly, pressure-vessel interface suitable to the requirements of the engine-test program, basic nuclear designs of the reactor (including steady-state and transient calculations sufficient for conceptual design of the reactor's inner control loop), and definition of requirements for core sensory instruments and control-element response. The conceptual design layout for the Kiwi-B, adaptation to flight loads and conditions including lateral core support will be complete, as will planning and scheduling for fuel-element processing and procurement including planning for the operation of the fuel-element development facility.

The design studies, laboratory-test programs, and pilot-plant fuel-element development work, which are planned to run concurrently with the Kiwi-B tests, will allow a smooth transition into the reactor and engine development tests of 1963 and later.

Analysis of the modification design for flight of the Kiwi-B-1 engine will be completed early in the program so that recommendations can be made to the LASL for inclusion in the reactor testing scheduled for January 1963. The Kiwi-B-2 and B-4 design analyses will be performed to the extent that, if either is selected, the modified flight designs can be released for fabrication of the NRX-1 (for the August 1963 test schedule). These design analyses will be devoted to determining the minimum mechanical-structural changes necessary for NERVA engine integration and for assuring that the reactor assembly will withstand the expected flight and transportation loads. The neutronics and thermal analysis will be conducted consistent with the design target dates indicated.

Reactor-control-system design work will be conducted consistent with the reactor target dates. The reactor-control system for NRX-1 will be carried to the point that the design can be frozen on 1 October 1962. Drawings must be released and fabrication initiated in October. Concurrent design, analyses, and research and development work will be conducted to the extent that the controls for the FX engine can be described and the static and dynamic performance can be analyzed. Similarly, the reactor-control-system work for the E-1 engine must be carried out to the extent that a design

freeze can be made 1 May 1963. Work on the FX and E-1 engines will be carried out to the extent that component, subsystem, and system design specifications can be written by 1 October 1962. Hardware research and development work will be performed to the extent that a flight-design control-drum actuator can be tested under mechanical and thermal environmental conditions. In addition, at least one actuator of a preliminary design will be tested in a side-by-side test by 30 June 1962, assuming that preliminary development testing will have been completed to the extent that possible failure can be attributed to the radiation environment alone. The delivery of hardware to the NTS for radiation testing in CITS by June of 1963 will be programmed.

Fuel-element processing and procurement will be done in this manner. The Westinghouse pilot plant will be activated by January 1962 with pilot-run pieces made to meet LASL specifications. Concerted effort will be exerted on B-1 types to meet the needs of the CITS reactor, for which production is planned to start 1 October 1962. Production for the NRX-1 core should start 1 November 1962. Research and development work only will be performed through 30 September 1962 to the point, for inspection and quality control purposes, that LASL methods can be mastered, and that the necessary work may be done as needed to ensure a process specification for NERVA fuel fabrication. Development, process-specification, and other work aimed at the outside procurement of cores, and the selection of candidate personnel for training, will be supported as required.

Mechanical testing of fuel elements and core structures will be carried on during the program period with the objective of laboratory testing sufficient to determine the behavior that may be expected under flight-environment conditions. The B-1, B-2, and B-4 reactor-core components will all be involved in this program in accordance with schedules compatible with the reactor-design schedules indicated above.

Details of the reactor-subassembly-task items and the associated schedules to meet the overall requirements of the NERVA program are presented in the Technical Administration Document for Task Item 1.3 in Volume II.

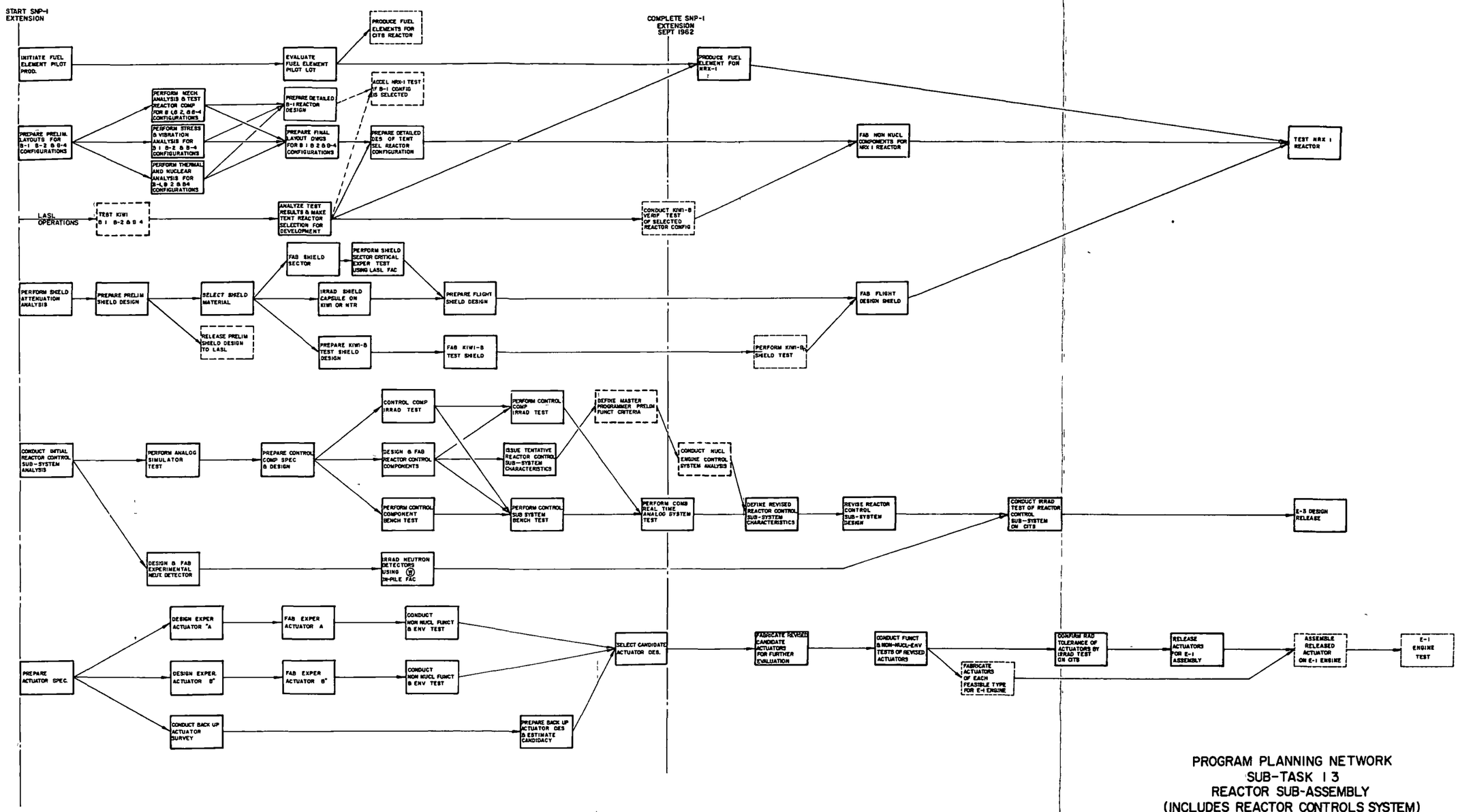

PROGRAM PLANNING NETWORK
SUB-TASK 13
REACTOR SUB-ASSEMBLY
(INCLUDES REACTOR CONTROLS SYSTEM)

Fig. IV-B-3-1, Vol. I

APPROX FAST NEUTRON FLUX LEVEL AROUND SHIELDED REFERENCE CORE

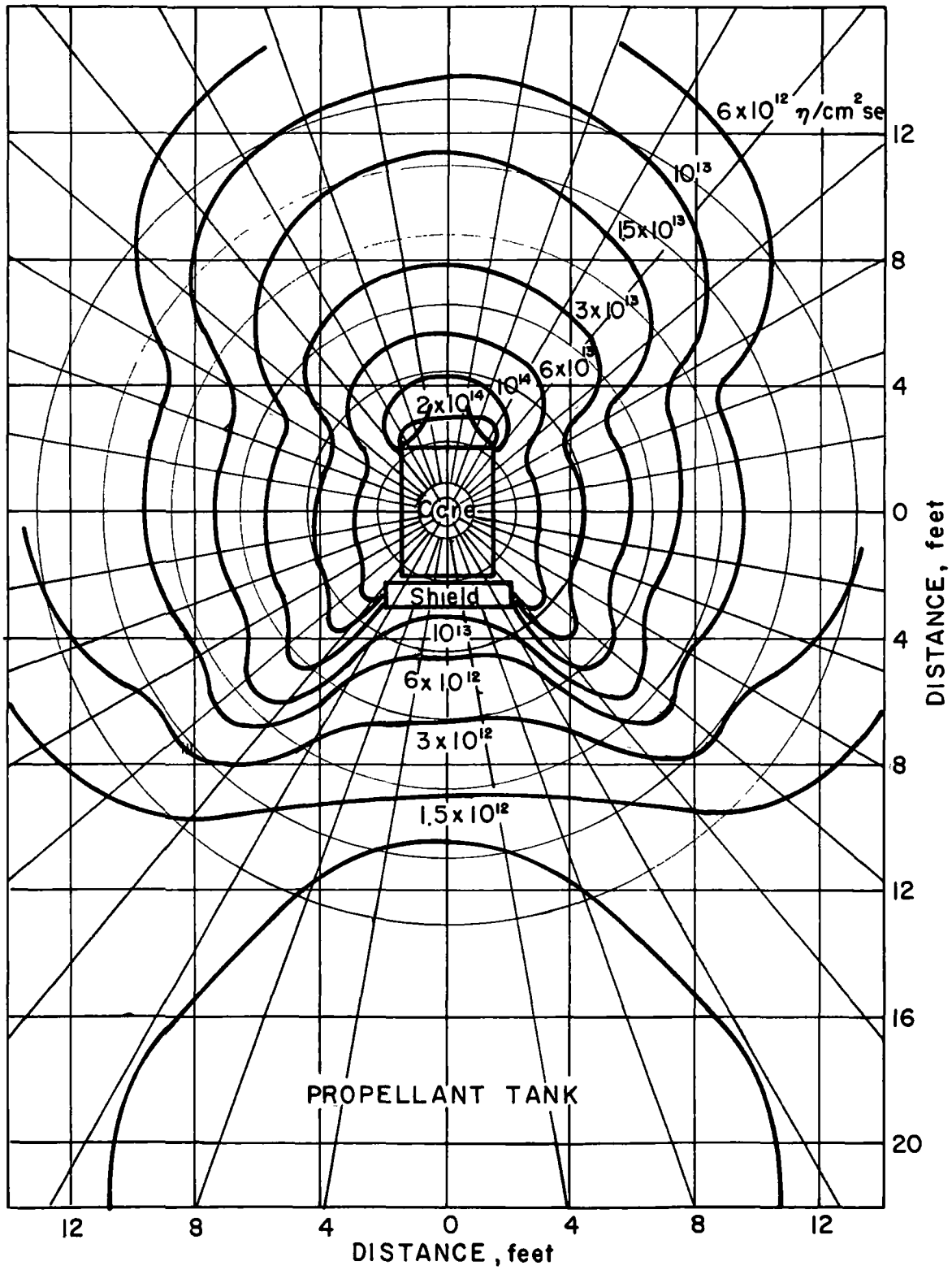

Fig. IV-B-3-2, Vol. I

GAMMA FLUX LEVELS AROUND REFERENCE SHIELDED CORE

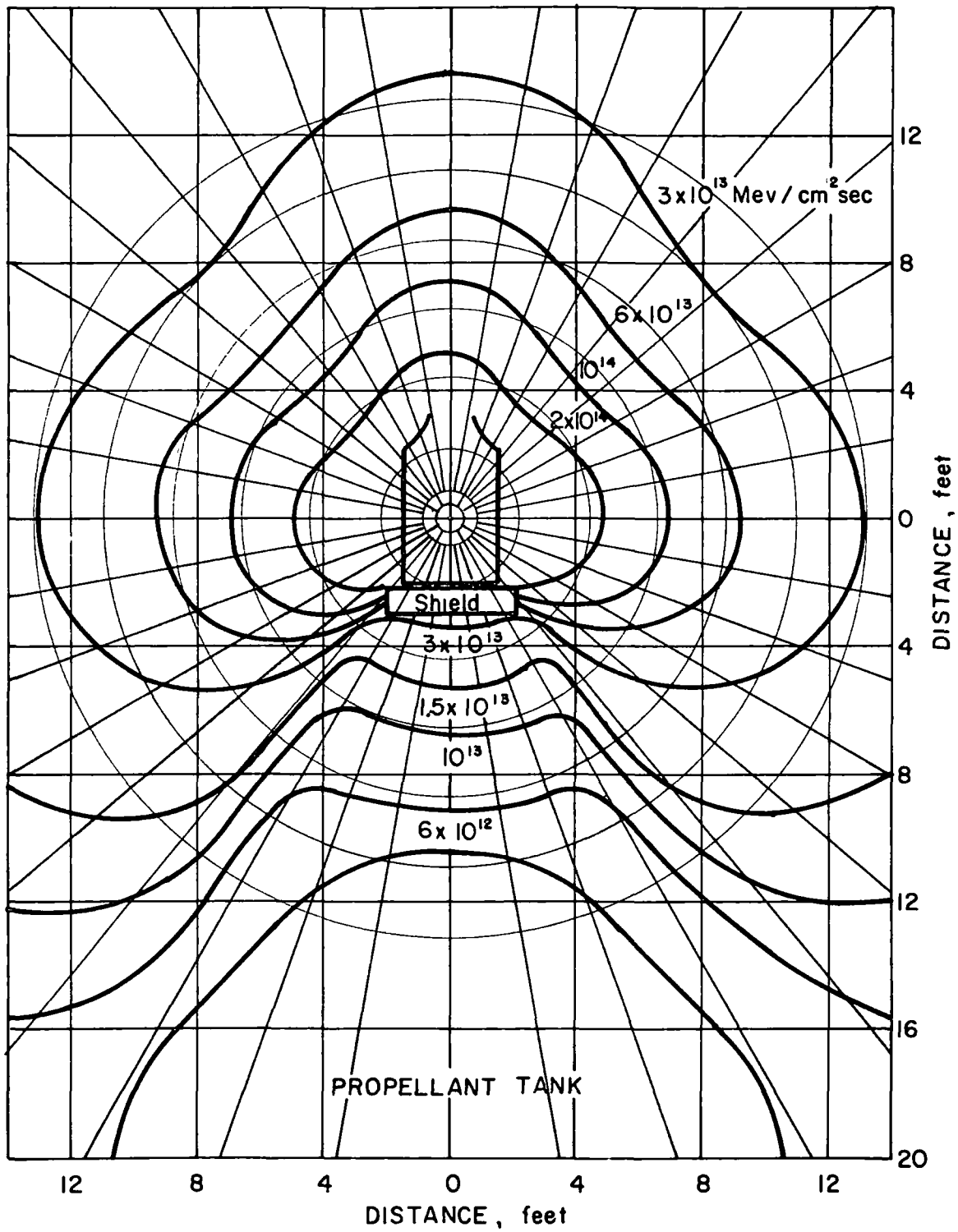

Fig. IV-B-3-3, Vol. I

~~CONFIDENTIAL — RD~~

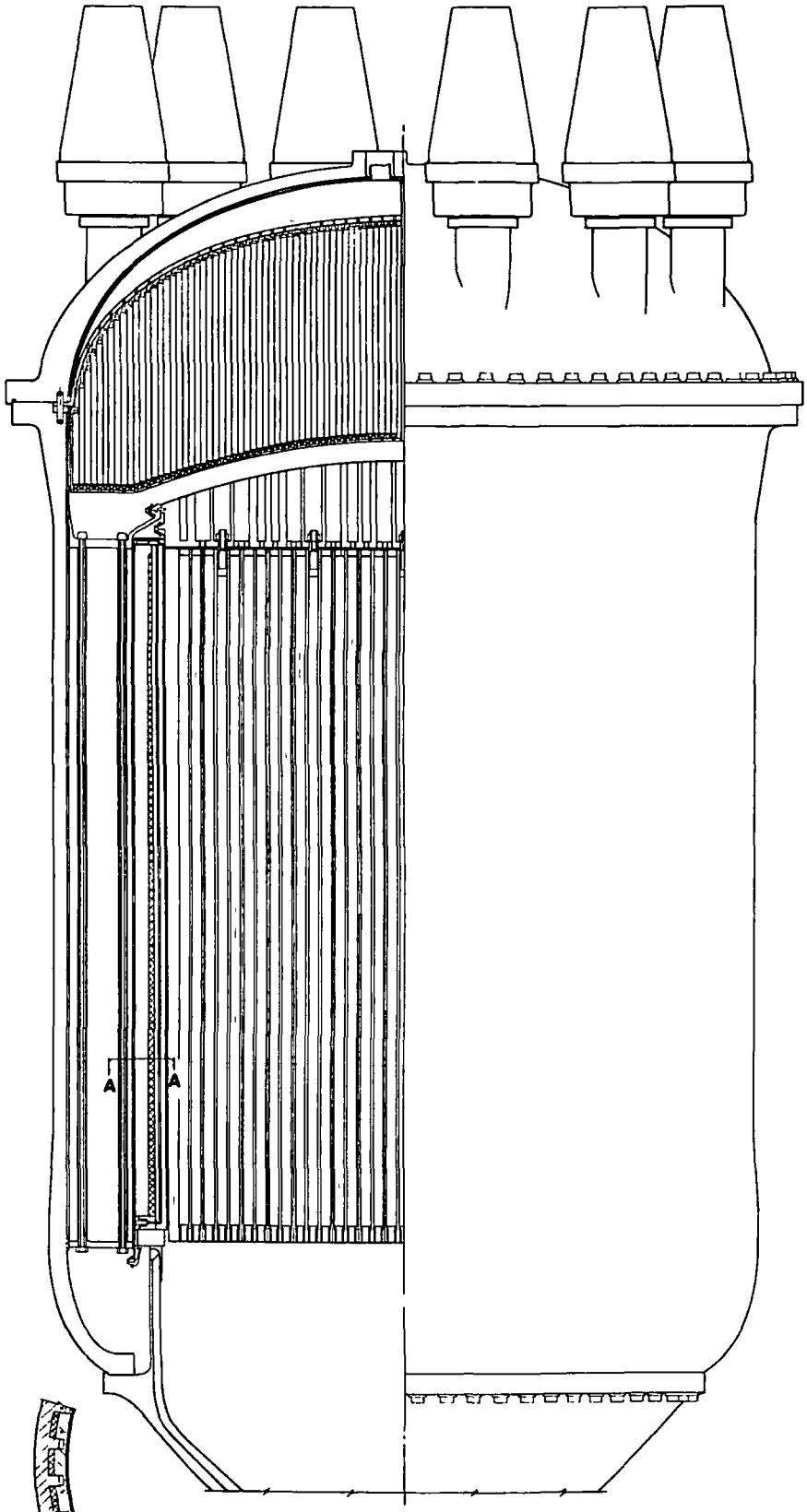

SECTION A-A

NERVA REACTOR BASED ON KIWI B 1

GRAPHITE FELT LATERAL SUPPORT

TOP LOADED CORE

Fig. IV-B-3-4, Vol. I

~~CONFIDENTIAL — RD~~

AGC 5213.

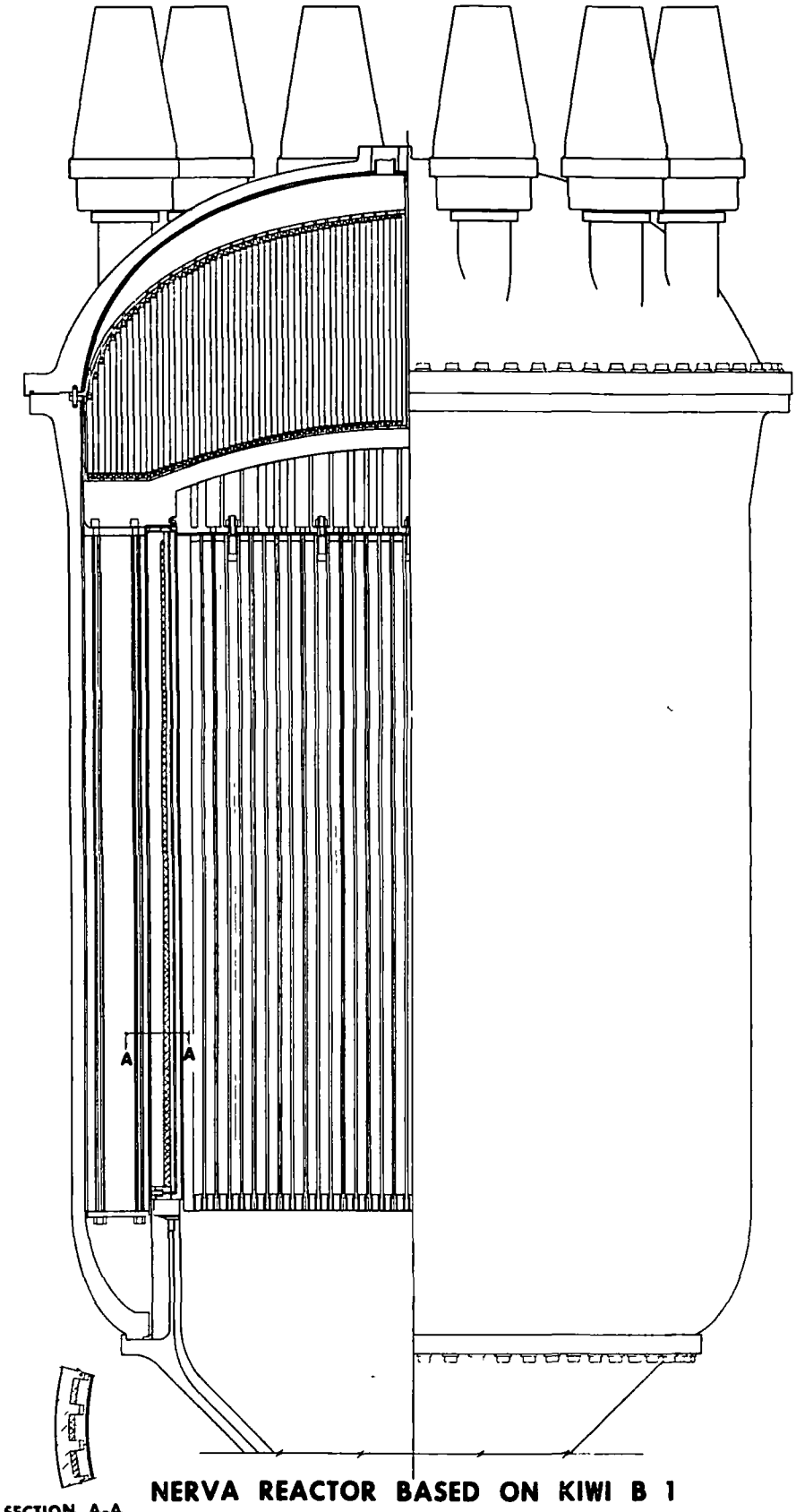

NERVA REACTOR BASED ON KIWI B 1

GRAPHITE FELT LATERAL SUPPORT

BOTTOM LOADED CORE

Fig. IV-B-3-5, Vol. I

COMPONENT/SUBASSEMBLY TEST SCHEDULE
REACTOR SUBASSEMBLY (TASK ITEM 1.3)

Component or Subassembly	Config. No. or Series	Test Objective	Facility	No. of Tests 1962 J	F	M	A	M	J	J	A	S	O	N	D	No. of Tests 1963 J	F	M	A	M	J	J	A	S	O	N	D	Total
Reactor	Kiwi-B-1 Kiwi-B-2 Kiwi-B-4	Demonstrate basic capability of reactor configuration.	Test Cell "A" NTS			1	1		1																			3
	Kiwi-B-N	Verification tests of tentatively selected reactor configuration.	Test Cell "A" NTS							1		1																2
	Kiwi-B-	Provide initial information regarding reactor shield and lateral support scheme.	Test Cell "A"													1												1
	NRX	Provide flight reactor component development and transient and durability demonstration.	Test Cell "A" NTS																				1		1		1	3

Fig. IV-B-3-6, Vol. I

4. Thrust-Chamber Assembly

a. General Considerations

The thrust-chamber assembly is divided into four subassemblies for the purposes of the development program. As shown in Figure IV-B-4-1 the subassemblies consist of the nozzle and nozzle extension, the pressure vessel, the thrust structure and gimbal, and the thrust-vector and roll-control assemblies. The breakdown has been established in this manner from functional and dynamic considerations of the thrust-chamber-assembly operation. The heated-bleed cycle has received emphasis during Phase I of this contract, and will be used as the basis for describing the subassemblies in this discussion. The hot-bleed cycle is the alternate under consideration in this program, with the major difference between the components of the thrust-chamber assembly required for the two cycles being the nozzle and nozzle extension. Analyses and testing to define the better cycle are in progress during Phase I, and should continue through the follow-on effort to yield the necessary data for cycle selection. Since the hot-bleed cycle is considered backup for the heated-bleed cycle, the follow-on effort on the hot-bleed testing program has been itemized as an additional program increment in the thrust-chamber assembly work item (Task Item 1.4). The work effort is described in terms of the subassemblies of the thrust-chamber assembly for clarity in discussing both the engineering effort in Phase I and the complete development problem.

b. Nozzle and Nozzle Extension

(1) Description

The NERVA heated-bleed nozzle is of the conventional convergent-divergent shape with a contoured divergent section. The construction is tubular, utilizing a protective coating to reduce heat transfer, with an integral, cast aluminum pressure jacket upstream of the throat to carry the pressure loads. The nozzle terminates at a divergent area ratio of 4 to 1 and is cooled by the entire propellant flow rate. The nozzle extension starts at the 4 to 1 area ratio and extends to the exit area ratio. It is of tubular construction, but is not coated. This extension is cooled by the turbine working fluid bled from the plenum chamber upstream of the reactor, and thus acts as an auxiliary heat exchanger to raise the turbine working fluid to the desired temperature necessary to drive the turbine.

The NERVA hot-bleed nozzle also has a conventional convergent-divergent shape with a contoured divergent section. However, the hot-bleed nozzle has a bleedoff port located near the reactor face where hot gases

from the core are bled off and cooled to 1760°R by injection of the relatively cold coolant. These gases are then used as the working fluid to drive the turbine for the turbopump assembly. The construction of the nozzle is the same as for the heated-bleed nozzle, with a Type 347 stainless steel tube bundle and cast integral aluminum jacket and flange. A protective coating is used to reduce pressure drop. The divergent section extends to a 9 to 1 divergent area ratio before the nozzle extension begins. The hot-bleed nozzle extension is radiation-cooled from 9 to 1 to the exit area ratio, and will be fabricated from a Type 110 AT titanium alloy or other suitable material.

(2) Critical Areas

The nozzle critical areas are the gas-side coating of the tube bundle, the brazing methods to be used for the aluminum pressure jacket and tubing, and the heat-transfer and pressure-drop conditions through the nozzle. The coating on the gas-side wall performs the double function of reduction of local heat-transfer rates in the throat region, as well as lessening of pressure drop through a reduction in total heat rejection to the coolant.

The nozzle contour is formed by a tube bundle which is furnace brazed for assembly purposes, and over which an aluminum jacket is cast to take hoop and axial loading in the convergent section. The aluminum jacket forms an integral pressure shell and flange, and is self-cooled by conduction to the tube bundle. The nozzle is secured to the pressure vessel with individually-cooled stainless steel studs.

The nozzle extension is critical, since it affects the turbine-flow rate and therefore the cycle operation, but, since changes in the required turbine-flow rate can be compensated for in the design, no major development problems are anticipated.

(3) Current Development Status

The preliminary design of the nozzle is in progress, and thermal and stress analyses are being made to refine the design.

Preliminary designs for the nozzles, on both the heated-bleed and hot-bleed cycles are being made. The heated-bleed design is essentially complete, due to its similarity to the Kiwi-B backup nozzle design.

Model test work for both cycles is in progress. Testing of 1/11 scale models is complete, and testing at 1/4 scale is starting. The

1/11 scale data presently is being reduced. Preliminary results for the hot-bleed port indicate an extremely high heating rate on the downstream side of the bleed port. The heating rate is apparently equal to the throat value ($\approx$20 Btu/in.^{2}sec) on the downstream side of the bleed port, and about half of this value on the upstream side. Water table tests, to evaluate the effects of bleed-port configuration on flow into the bleed-port line, are in progress. Heat-transfer tests with LH_2 for application to both designs are being made, using a totally heated, curved tube to simulate the NERVA throat contour.

Candidate coating materials for the nozzle are being screened from a reactivity and thermal-shock viewpoint.

Hot-bleed-port tests, using a modified LR 87 AJ-1 thrust chamber, are in progress to evaluate the bleed-port problem areas. At the most, only three long-duration tests will have been made at the end of Phase I. The first five tests had combustion instability, and the program has been stopped to allow insertion of gas side baffles to the injector to suppress the instability. It is expected that three additional tests with the baffled injector will be made during Phase I.

Thermal analyses of the pressure-vessel flange, aluminum jacket, and hot-bleed extension flange are in progress to define thermal and stress limitations on the design. The possibility of throat inserts and/or film cooling of the throat area is also being considered as backup to the design effort.

(4) Development Problem Areas

Operation of the NERVA nozzle is dependent upon the ability of the coolant to keep the wall temperature of the tube bundle within a satisfactory operating regime, with only a reasonable pressure drop in the circuit. Due to this requirement, the NERVA nozzle may utilize a protective coating on the gas-side wall to reduce both heat-transfer rates and pressure drop, although it is not believed to be necessary, at a rate of reduction (and hence also the local flow velocity and pressure drop) dependent upon the coating material and the heat-transfer conditions on the liquid side. Use of the coating as a safety factor for the nozzle makes it necessary to have a well-defined heat-transfer coefficient for both the hot gas and the coolant.

The four problem areas related to the throat region are therefore: the gas-side heat-transfer coefficient, the liquid-side heat-transfer coefficient, the coating material properties, and the data on behavior under operating conditions. The NERVA nozzle requires a more precise evaluation of the heat-transfer coefficient, because heat fluxes are considerably larger than in chemical

nozzles, and also because the heated-bleed cycle requires a finite and defined quantity of heat to be rejected through the nozzle extension, thus making the design of the nozzle extension dependent upon an accurate knowledge of the hot-gas and coolant heat-transfer coefficients. However, the turbine weight flow may be adjusted according to the amount of heat rejection to this flow; therefore, this problem becomes one of obtaining precise information for detail design.

There is a special problem area in the hot-bleed-port nozzle in addition to the throat problems. The heating rates in the bleed-port area apparently equal that of the throat, but, in addition, the bleed port has a manifolding and flow distribution problem not found in the throat. Because of these conditions, the bleed port must either have a considerably better protective coating than the throat region or resort to film (or transpiration) cooling to permit satisfactory operation. Another design approach would be to change the geometry of the bleed port to help alleviate the conditions in this region. Of equal concern is the possibility of incomplete mixing of the bleed-off gases and coolant which would cause a severe heating problem in the line elbows, and might require film cooling in these regions as well.

An additional factor is that the presence of a reactor in the NERVA engine requires that failures in the nozzle (as well as in any other component that may lead to engine destruction) be minimized. The need for detailed information on the hot-gas-side heat-transfer coefficient in the NERVA nozzle was recognized at the beginning of the program, and Task Items 7 and 13 in the current problem include experimental programs for obtaining data for the NERVA nozzle contour, employing heated nitrogen gas as the testing fluid.

Considerable work has been done on obtaining data on liquid hydrogen as a coolant by NASA-Lewis, Aerojet, North American Aviation, and the Garrett Corporation, but the test data has not been obtained under the conditions that will exist in the throat region of the NERVA nozzle. Differences in the test data from these sources indicate that test configurations have a considerable influence on the heat-transfer conditions and require additional test data for the NERVA design.

The use of coatings as a means of reduction of heat flux and pressure drop in the nozzle coolant passages is very attractive. In terms of their published physical properties, specifically thermal conductivity, there are many coating systems which, in the order of 0.010 to 0.020-in. thick, can reduce the throat heat flux by a factor of 4, or from 20 to 5 Btu/in.^{2}/sec. Such a reduction in heat flux would be a major benefit to the NERVA nozzle design since thermal stresses as well as pressure drop in the coolant passages would be reduced to reasonable limits. Although coating systems have been successfully employed in other nozzles (such as tungsten carbide in the Ablestar nozzle) they have not been subjected to NERVA operating conditions, since no other nozzle to date has had the unique combination of conditions present therein. It is therefore

necessary to gain experience with coating systems under NERVA nozzle conditions as soon as possible to benefit from the use of a coating in this nozzle. These coatings must withstand both the hot reducing conditions of 4000°F hydrogen and the oxidizing conditions of the LH_2/LO_2 propellant system possible in the simulation testing programs for the NERVA nozzle. The coatings must have a minimum content of materials with long half-lives of induced radioactivity, and must be sufficiently thin to assure the highest probability of remaining intact after many firings of the nozzle. They must exhibit good spalling resistance to the thermal shock resulting when the thin wall to which they are attached is chilled momentarily to the temperature of LH_2 and then suddenly heated to approximately 1000°R. Because of these and other unique requirements, it is necessary to initiate a coating development program as early as possible in the follow-on program to supplement the screening tests currently in progress during Phase I. It is to be noted that coatings applied to either side of the throat, which would be subjected to less severe conditions, would be beneficial in the reduction of pressure drop or, as an alternative, allow higher throat velocities with the same pressure drop.

The assembly of the tube bundle and aluminum pressure jacket is another problem area in the nozzle. The cobalt content of the Nicrobraz currently in use for Titan thrust chambers makes the use of this brazing material undesirable because its long half-life. However, during the Titan development program, many brazing materials were tested that were adequate structurally but would not provide the necessary pressure seal for the Titan thrust chamber. The NERVA nozzle does not have this problem, since the aluminum pressure jacket acts as a pressure seal in the converging section; with only a small weight penalty, this jacket can be extended to the coolant inlet manifold to provide a complete pressure seal. Thermal stresses during operation of the nozzle put the aluminum-tube interface in compression, and will minimize axial flow of any gas that might leak through pinholes in the brazing material and will also maintain good thermal contact. Therefore, the brazing and aluminum jacket assembly problems can be attacked simultaneously to provide a completely satisfactory design for the NERVA nozzle. The flange joining the nozzle to the pressure vessel presents a design problem to provide adequate pre-loads through the studs. However, known design procedures can solve this problem.

The effects of the high radiation rate and total dosage on the nozzle are not clearly defined at this time. Data from the Plumbrook reactor, Kiwi-B, and NRX tests will define the problems associated with these effects.

(5) Proposed Program

To obtain a nozzle assembly suitable for "E" engine use, the development program shown as Task Item 1.4, Program Planning Network,

Figure IV-B-4-2 and Figure IV-B-4-3, is proposed. This program entails the detailed design, fabrication, and testing of the NERVA nozzle during the first nine-month program increment, and incorporation of all subassemblies as a thrust-chamber assembly early in 1963. The hardware demand schedule and component test schedule are shown in Figures IV-B-1-6 and IV-B-4-4. The program effort for the first nine months is detailed in the technical Administration Document for Task Item 1.4 and can be found in Volume II, Section III.

The nozzle program will consist of the following

The preliminary design of the heated-bleed NERVA nozzle, as established during Phase I, will be refined, and a detailed design will be completed and released for fabrication. Thermal and stress analyses will continue to be used for refinement of the design during this period.

To provide the necessary backup data, material evaluation tests will be run on coatings, brazing materials, and stress-bearing jacket materials.

A series of injector development tests will be made early in the program to demonstrate the performance and stability of the system chosen for simulation testing of the nozzle. This system will incorporate baffles of the type in use on the XLR-87 AJ-5 thrust chamber to insure that tangential combustion instability will be suppressed

In the second or third month of the program period, the Kiwi-B nozzle will be tested at conditions mutually agreed upon by Aerojet and SNPO for two 15-sec tests to demonstrate the adequacy of the design.

In September 1962, the NERVA nozzle will be tested in the same manner, as a demonstration of the adequacy of the design and coating.

An alternative program is proposed, to evaluate the hot-bleed nozzle, that will extend through the first nine months of the follow-on effort.

As a continuation of the chemical engine hot-bleed-port tests of Phase I, six of the nine injector development tests for the Kiwi-B nozzle will be conducted using hot-bleed-port chambers from Phase I instead of the standard XLR-87 AJ-1 thrust chamber. On completion of these tests in March 1962, two NERVA-type nozzles and adaptors simulating the lower portion of the pressure vessel will be fabricated, with the bleed-port design based on the test

experience from the chemical engine tests and the scale model tests described below. Two tests will be made on this nozzle system in September 1962 to demonstrate the adequacy of the design.

Model testing at the 1/4 scale will continue in order to obtain data on hot-bleed-port configurations, radiation cooling of the nozzle extension, and effects of conical nozzle extensions. Heated nitrogen (1600°R) will be used as the hot-gas supply, with model nozzles fabricated from stainless steel to act as a thin-wall heat sink. These test data, as well as heat input data from Kiwi-B testing, will then be used in conjunction with the chemical engine hot-bleed-test results to obtain the detailed design of the NERVA hot-bleed nozzle for testing in September.

c. Pressure Vessel

(1) Description

The pressure vessel forms the housing for the reactor assembly and has two major flange joints. Cooling for the pressure shell is provided by the total propellant flow in a parallel circuit with the reflector, while the flange coolant is supplied from a separate circuit. Since the pressure vessel is one of the major items from an engine weight standpoint, several materials of construction (7079-T6, and 6061-T6 aluminum alloys, and AT 110 titanium alloy) are being considered. Final selection will be made on the basis of weight, thermal and radiation characteristics, and fabrication problems.

(2) Critical Areas

The pressure-vessel critical areas depend to some extent on the material of construction but, in general, center around joints, including seals, and local stress concentration points.

The nozzle-pressure vessel flange is a critical area common to both components and is located in a high radiation heating zone, an area in which both the dose rate and total dosage can influence the design. The upper flange on the pressure vessel may be shielded, and therefore is less critical. The large changes in temperature are coupled with stress concentrations at all bosses to make them critical areas in the fabrication of the pressure vessel.

(3) Development Status

Preliminary design studies are being made to evaluate the problem areas associated with each of the three candidate materials

for the pressure vessel (6061-ST-T6 and 7079-ST-T6 aluminum alloys, and AT 110 titanium alloy).

Detailed thermal and stress analyses are being conducted for the flange and boss areas of the pressure vessel for these materials and alternative flange designs. Material (AT 110 titanium alloy) for a spare pressure vessel has been ordered for structural tests. Thus, data will be provided at an early date on fabrication problems of these materials, and it may be determined whether or not the predicted weight savings can be realized with a titanium alloy pressure vessel.

(4) Problem Areas

Problem areas for the pressure vessel center around the joints (flanges) and localized stress concentration points. But again, these are problems for which known techniques of solution are available. Thermal contraction and pressure expansion of the pressure vessel during the startup transient is an additional problem area causing coolant passages between dissimilar components to change in dimension, as also will the attachment to the thrust structure, thus defining the reflector cooling system to avoid localized starving of areas. Also, the flanges may be utilized to clamp the reactor subassemblies within the pressure vessel, thus placing further requirements on the joint design.

(5) Proposed Program

The development program proposed for the pressure vessel is shown graphically as Task Item 1.4 in the Program Planning Network, Figure IV-B-4-2. This program provides for incorporations of the pressure vessel into an integrated thrust-chamber assembly in about one year. Design information will feed back from Gen. II simulator testing, as well as NETS and the LASL Kiwi program, to establish a design freeze in May 1963. The mileposts for this program are shown in Figure IV-B-4-3 for the time period through 1963. A detailed breakdown of the program through the first nine months can be found in Volume II, Section III, Task Item 1.4. For the overall program, the hardware demand and component test schedules are shown in Figures IV-B-1-6 and IV-B-4-4. The proposed program for the pressure vessel is as follows:

The materials ordered during Phase I (AT 110 titanium alloy, and 6061 T6 aluminum) will be used to fabricate two pressure vessels for use during the new program period.

The preliminary design from Phase I will be detailed and released for fabrication of these pressure vessels.

The 6061 T6 pressure vessel will be used for the Gen. II, Mod. 1 simulator testing and the AT 110 titanium tank will be subjected to extensive structural testing to prove the design concept. Thermal and stress analyses will continue during this period to verify the design changes involved in producing the detailed designs and refinements.

Proof and structural tests will be made on this pressure vessel during the new program period. Uni-axial coupons from the construction materials will be tested over the environmental temperature range to provide property data for evaluation of the structural tests. Bi-axial tests will be performed in a liquid hydrogen environment.

d. Thrust Structure and Gimbal

(1) Description

The thrust structure is in two sections which are joined by the gimbal. The upper section mates to the vehicle thrust structure and houses the tank shutoff and coolant bypass valves, and will probably also house the neutron sensing equipment for the engine-control systems. The pneumatic accumuoators and upper end of the gimbal actuators are attached to this section. The lower section attaches to the pressure vessel and acts as a housing and support structure for the turbopump assembly. The roll-control assembly and the lower end of the gimbal actuator are attached to this section. The gimbal is a universal joint-type device made of AT 110 titanium alloy using needle bearings, which are currently planned to be of 17-7 PH steel.

(2) Critical Areas

The thrust structure is critical for the "E" engine primarily from the standpoint of its effect on the fundamental frequency of the thrust-chamber assembly, and its ability to transmit the thrust loading through the gimbal universal joint.

(3) Development Status

The preliminary design of the thrust structure and gimbal is in progress, and is being checked by stress, thermal, and vibration analysis.

(4) Problem Areas

Stiffness of the thrust structure for both radial and tangential vibrational modes represents a major problem area for the thrust structure

In the gimbal joint, the close tolerances necessary for the operation of the thrust-chamber assembly are a major problem area.

(5) Proposed Program

The interrelation of the development of the thrust structure with the development of the thrust-chamber assembly is shown as Task Item 1.4 in the program planning network. Figure IV-B-4-3 gives the milestones in this development program. A detailed program breakdown can be found in Volume II, Section III, Task Item 1.4. The overall hardware demand and component test schedules can be found in Figures IV-B-1-6 and IV-B-4-4. The thrust structure development program will consist of the following

Analysis of the thrust structure design will continue in the new effort, with thermal, stress, and vibration analyses performed in Phase I used as the basis to refine the preliminary design.

One additional thrust structure, making a total of two, will be procured during this program for structural testing. This testing will occur during July and August 1962, and will consist of limit-load and static compliance tests on the structure.

The preliminary design of the gimbal will be detailed, and fabrication will be initiated in May 1962. Fabrication will be complete in August, and laboratory tests will be run in September 1962.

e. Roll-Control Nozzle

(1) Description

Roll control on the engine is accomplished by discharging the turbine exhaust fluid through two diametrically opposed nozzles. These nozzles are canted 15° with respect to the vehicle centerline to minimize possible adverse effects of impingement of the exhaust gases on the pressure vessel. A rotating joint is provided in the nozzle feed line, using rolling contact bearings, and is almost identical to the Titan roll-control assemblies.

(2) Critical Areas

This is a non-critical component. The only work effort will consist of a detailed design to verify envelope and frequency response characteristics.

(3) Development Status

Preliminary design of the roll-control nozzle assembly is in progress. Thermal analyses of the cooling problems are in progress, in addition to response frequency analysis for definition of the limits of operation of the assembly.

(4) Proposed Program

This is a non-critical component. Only a detailed design will be completed. The milestones are shown in Figure IV-B-4-3.

Fig. IV-B-4-1, Vol. I

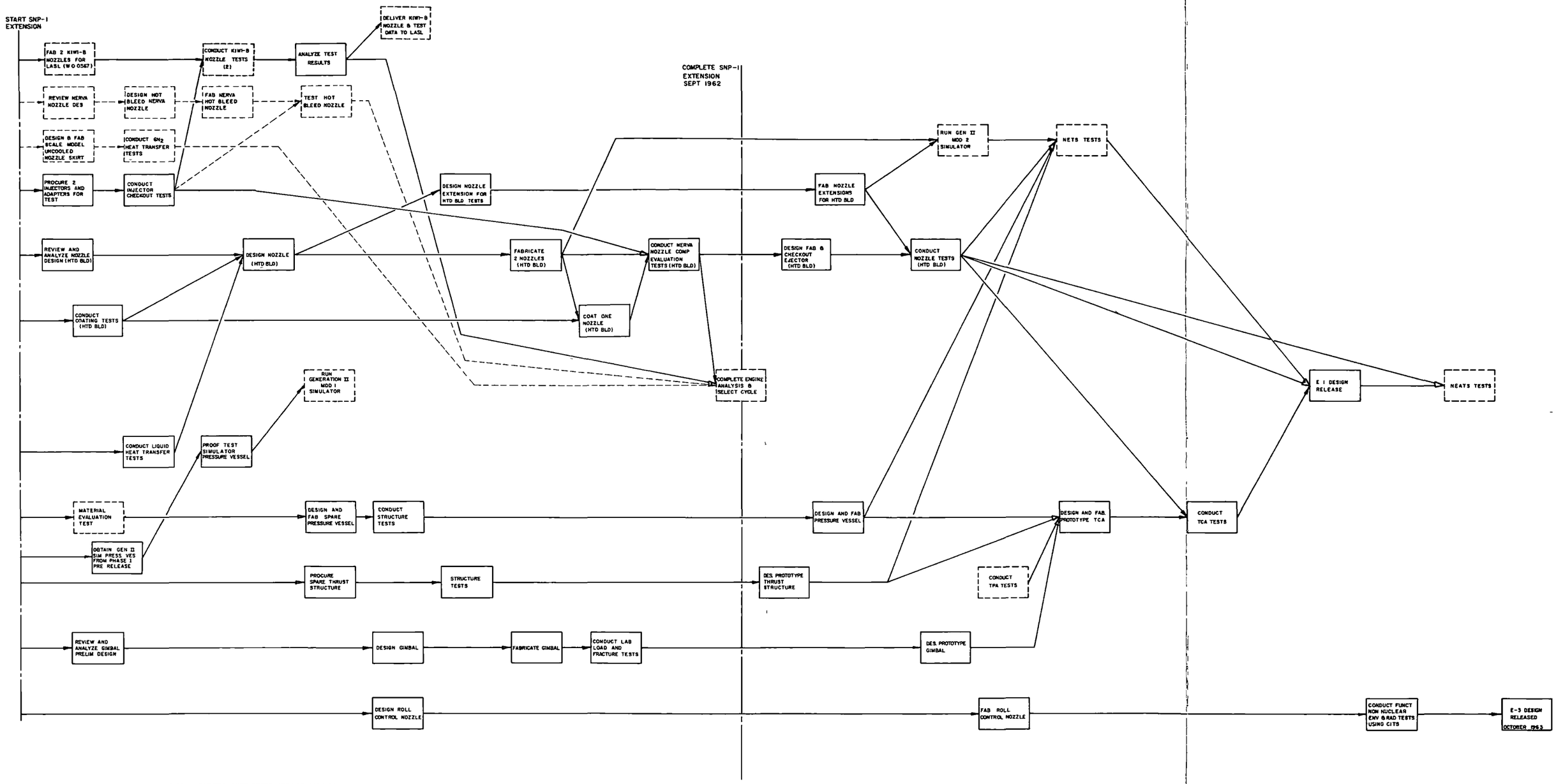

1 HOT BLEED PORT TESTS & GN_2 HEAT TRANSFER TESTS ARE NOT PART OF COSTED PROGRAM BUT ARE PRESENTED AS AN ADDITIONAL PROGRAM OPTION

PROGRAM PLANNING NETWORK
SUB-TASK 1 4
THRUST CHAMBER ASSY

Fig. IV-B-4-2, Vol. I

NERVA PROGRAM

THRUST CHAMBER ASSY.

NERVA
Program Schedules
and
Milestones
11 January 1962 Through 1963

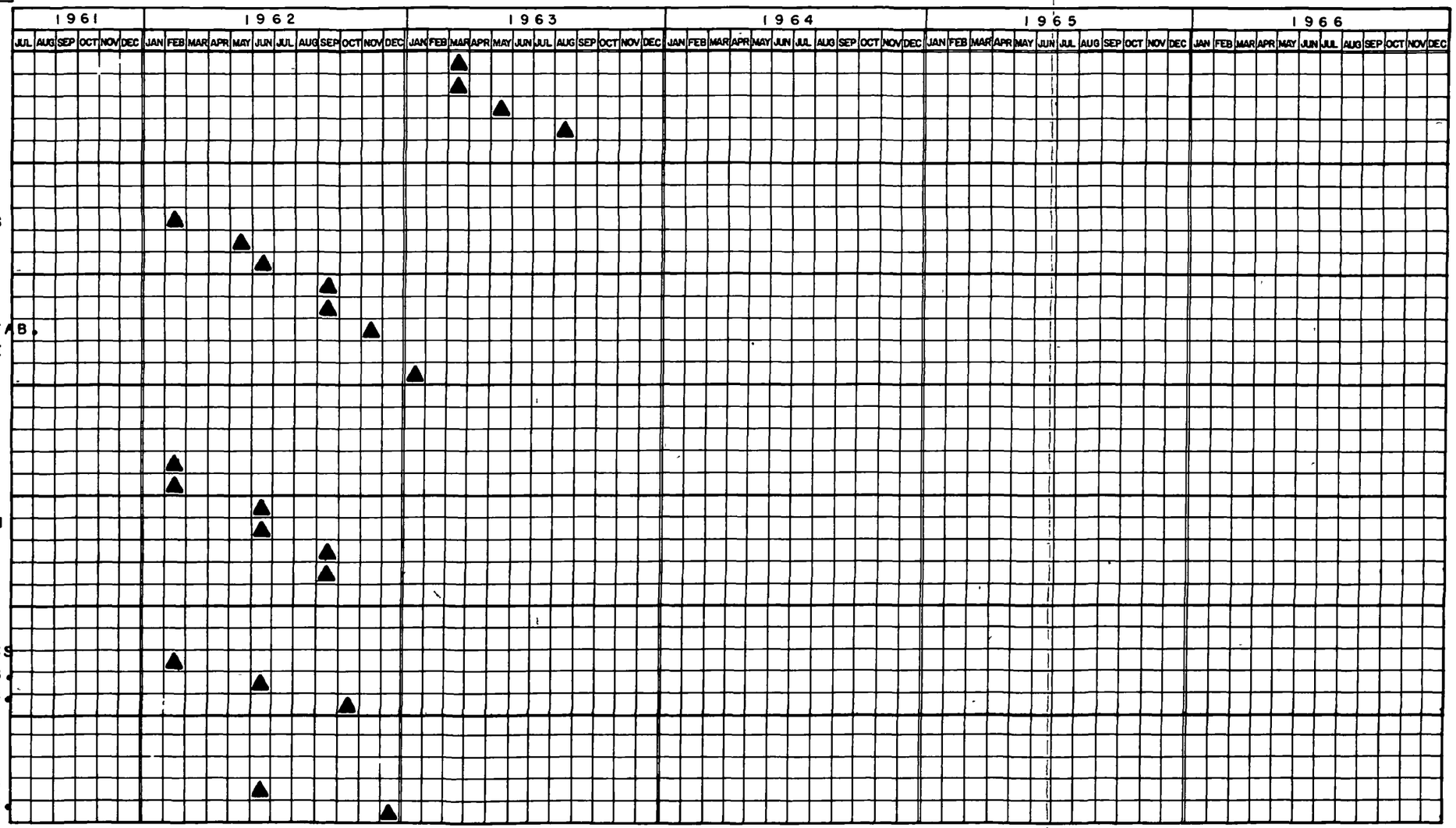

* THESE MILESTONES COVER SEPARATE NOT BLEED EVALUATION WORK WHICH IS COSTED AS AN ADDITIONAL PROGRAM PORTION.

Fig. IV-B-4-3 (Sheet 1), Vol. I

NERVA PROGRAM

THRUST CHAMBER ASSY.

NERVA
Program Schedules
and
Milestones
11 January 1962 Through 1963

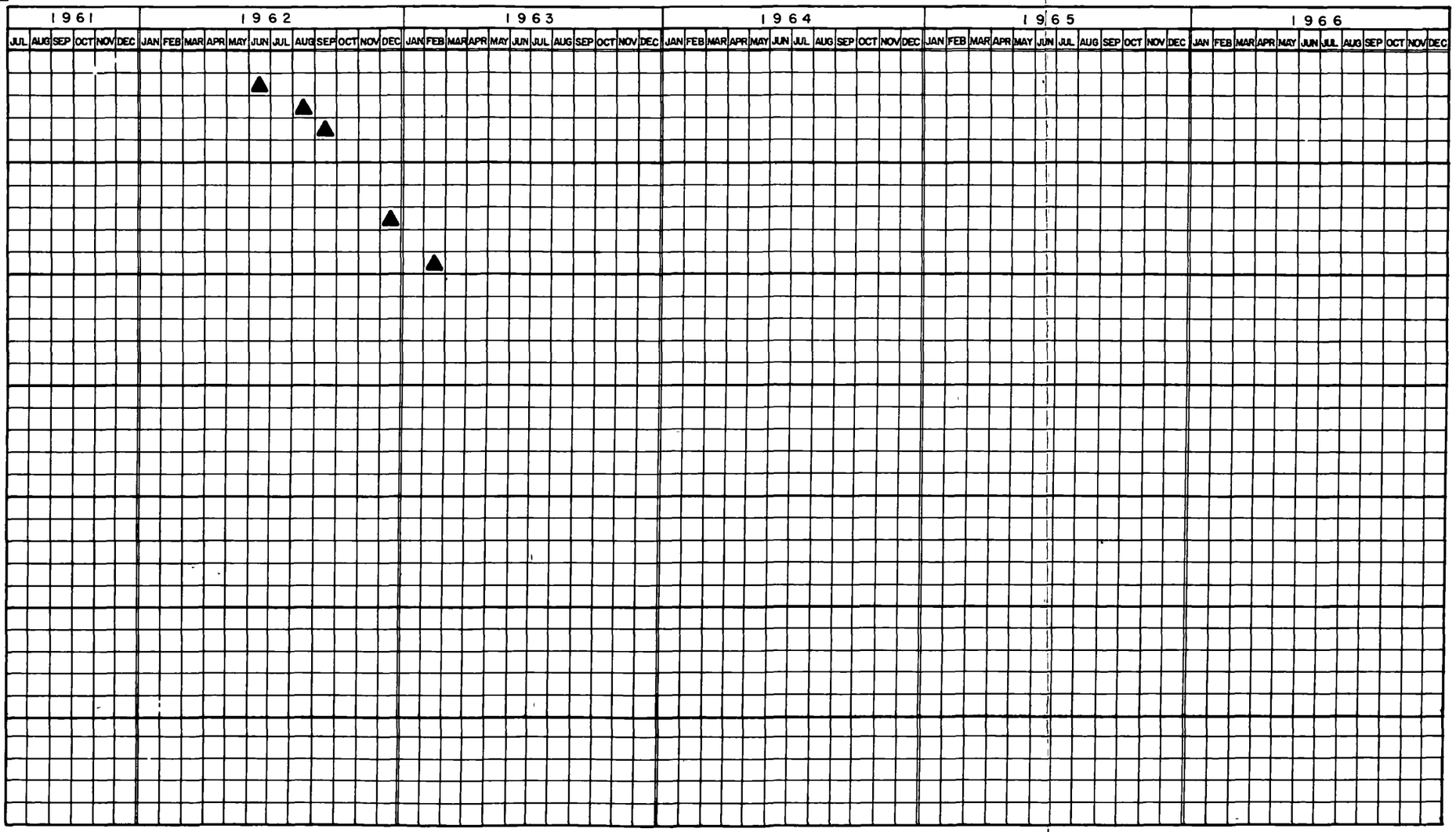

Fig. IV-B-4-3 (Sheet 2), Vol. I

COMPONENT/SUBASSEMBLY TEST SCHEDULE
THRUST CHAMBER ASSEMBLY (TASK ITEM 1.4)

Component or Subassembly	Config No. or Series	Test Objective	Facility	No. of Tests 1962 J	F	M	A	M	J	J	A	S	O	N	D	No. of Tests 1963 J	F	M	A	M	J	J	A	S	O	N	D	Total
XLR-87 Injector and Chamber	XLR-87	Develop injector as a tool for simulation of nonradiation operating environment of the NERVA engine.	LRP Area C-6A	6	3																							9
Kiwi-B Nozzle Test Assembly	Kiwi-B	Demonstrate operation of Kiwi-B nozzle at thermal conditions in non-radiation environment simulating the nuclear engine heat flux.	LRP Area C-6A		2																							2
NERVA Nozzle Test Assembly	NERVA	Determine operational characteristics of nozzle at design pressures and heat flux-coating evaluation.	LRP Area C-6A									(2)*	3	3	2	5	6	6	6	6	6							45
Thrust Chamber Assembly		Vibration survey of simulated TCA to determine fundamental frequency.																15	15									30
Gimbal Assembly		Evaluate gimbal structural integrity at ambient and LH_2 temperatures while subjected to rated thrust load.	LRP Area C-6A									11				12		9										32
Pressure Vessel		Proof test for acceptance of pressure vessel.	SRP Structures Lab					1									1											2
		Stress coat test to determine critical stress regions.	SRP Structures Lab					1									1											2
		Limit load survey to determine magnitude of critical stress.	SRP Structures Lab						3									3										6
		Deflection survey to determine design envelope compatibility.	SRP Structures Lab							3									3									6
		Destruction test to determine structural integrity at ultimate loads.	SRP Structures Lab										1									1						2
Pressure Vessel Materials		Material uniaxial mechanical properties throughout the environmental temperature range.	Materials Lab	36	36											36	36			36	36							216
Pressure Vessels Materials Battle Program		Material biaxial mechanical properties throughout the environmental temperature range.	Materials Lab						6						12			6										24

*() Indicates alternative hot bleed tests.

Fig. IV-B-4-4 (Sheet 1), Vol. I

COMPONENT/SUBASSEMBLY TEST SCHEDULE (Continued)
THRUST CHAMBER ASSEMBLY (TASK ITEM 1.4)

Component or Subassembly	Config. No. or Series	Test Objective	Facility	No. of Tests 1962 J F M A M J J A S O N D	No. of Tests 1963 J F M A M J J A S O N D	Total
Thrust Structure – Upper	Series 1	Limit load survey to verify load carrying ability and stresses.		1	1	2
		Static compliance survey to check stiffness at limit loads.		5	5	10
Thrust Structure – Lower	Series 1	Limit load survey to verify load carrying ability and stresses.		1	1	2
		Static compliance survey to check stiffness at limit loads.		5	5	10
Thrust Structure Assembly – Upper and Lower	Series 1	Static compliance survey to check stiffness of complete assembly at limit loads.		5	5	10
		Vibration survey of complete assembly to determine fundamental frequency.		15	15	30
Thrust Structure Assembly – Upper and Lower	Series 1	Destruction test to determine ultimate capacity.		1	1	2

Fig. IV-B-4-4 (Sheet 2), Vol. I

5. Engine Controls

The engine controls may be considered to consist of several loops: the reactor control loop (the inner loop), the temperature loop (the outer loop), the pressure loop (thrust control), the cooldown subsystem, and the master programmer. The thrust vector control (TVC) and roll-control actuators are also considered as part of the engine controls.

The reactor control loop regulates and maintains the reactor power level and is made up of neutron sensors, amplifiers, control drums, and control drum actuators. Temperature is measured at various points and this information is used in safety control subloops.

The temperature loop provides a refined control on the reactor control loop to maintain the gas temperature at a level to obtain maximum I_{sp} of the engine. This loop contains thermocouples, amplifiers, and compensating networks to provide continuous command to the reactor control loop.

The pressure loop controls the flow from the propellant feed system by varying the turbine speed. This loop consists of the pressure sensors, amplifiers, turbine power-control valve (TPCV), turbine power bypass valve (TPBV), and turbine power-control actuator (TPCA).

The cooldown subsystem maintains the proper propellant flow to cool the reactor during the engine shutdown sequence. It consists of the cooldown valve, an electromechanical actuator, thermocouples, and amplifiers.

The master programmer is the brains of the engine control system. It performs the major task of generating the commands to the engine controls based upon the requirements from the vehicle guidance and condition of the engine with regard to malfunctions and safety. The master programmer is made up of reference generators, sequencers, amplifiers, logic circuits, malfunction circuits, timers, and registers.

The design and development of the engine controls will be evolved from the information obtained from various analyses, simulations, hardware tie-in, and component testing. Figure IV-B-5-1, Program Planning Network, Task 1.5 - Engine Controls, gives a concise picture of the procedures to be followed for the design and development of the control systems.

a. Testing Policies

The kinds and numbers of tests to be run on the various control components vary. The non-irradiation environmental tests will provide the necessary information to determine the causes of any failures during irradiation testing.

In general, the components will be subjected to environments of temperature, humidity, and vacuum with a limited amount of shock and vibration tests. Functional tests will be run in these environments on two items of each component.

After the non-irradiation environmental tests, two new items of each component will be subjected to radiation tests, usually CITS. In general, one item will be tested, and the second item will be used as a back-up. In all cases, functional tests will be run just prior to, during, and immediately following irradiation.

Careful post-mortem examination and tests will be performed to determine necessary design changes.

Program milestones, detailed hardware delivery, and test schedule are shown in Figures IV-B-5-2, IV-B-5-3, and IV-B-1-6.

b. Analysis of Controls

(1) Status of Phase I Effort

A portable test stand instrumented for hydrogen gas operation is complete. Preliminary tests of actuator hardware are being carried out in preparation for tie-in to the analog computer. A shim drum, a regulator drum, and a turbine power control valve actuator are being delivered.

Preliminary studies on both the hot- and heated-bleed engine cycles will have been completed. A preliminary design freeze of the controls system is to be made for the final report.

The preliminary design of the engine thrust vector and roll control is being carried on, based on best available requirements for RIFT missions. Follow-up work will be delayed until May 1962, when requirements of the chosen RIFT contractors are reviewed.

(2) Program Plan

The NERVA Program Plan and Milepost chart, Figure IV-B-5-2, Item 1. Analysis indicate the pertinent events and timing of the analysis to be done. In general the analytical work will be a continuing effort throughout the entire program.

During the first nine months of the program period, real-time simulation tests with the experimental TPCV and control rod actuators will be completed for the heated-bleed and hot-bleed engines. (See paragraph 4.1.1 under the TAD, Task 1.5.) The results will indicate the type of control compensation necessary for inner loop stabilization of both the propellant feed system and the core exit-gas temperature loop. Reactor control-rod actuator programming will be coordinated with Westinghouse. Test data will also generate information on non-predictable actuator dynamics, safety and malfunction studies, engine programmer requirements, and actuator redesign criteria.

The analysis and design of the thrust-vector and roll-control actuator, will be coordinated with the RIFT contractor based on his requirements. From these control design requirements a more compatible engine assembly layout can be determined for use in the E-3 Series testing, and specifications for the TVC and roll actuators can be supplied in November 1962 to the actuator developer.

Determination of the operational mode for flow control will be a continuance of the work initiated during Phase I. A combination of the analytical and test results in this area from LASL, SNPO, and the participating contractors will be made and a decision reached in September 1962. Both digital and analog computer techniques will be employed in this analysis. Pulsed, continuous, or a combination flow control mode will be determined, and a control loop designed on this basis.

Preliminary tests of the cooldown control system will be initiated in December 1962. Tests will be made of the complete control loop by flowing hydrogen through the Aerojet fuel-element blowpipe furnace facility where a thermocouple is attached at the end. Full-scale flow characteristics will be accomplished by a bypass orifice downstream of the cooldown valve. These tests will be compared with the actual B-series core cooldown tests to determine the applicability of the control loop design. The cooldown valve will be a radiation tolerant design.

Performance tolerance and malfunction studies will be continuous efforts throughout the program. The tolerance studies will examine the effect of static tolerances on the engine control capabilities. Malfunction studies will determine the effect of component dynamic performance degradation relative to overall engine control requirements. A preliminary report is expected to be issued in September, 1962.

Preliminary analytical studies on both the hot- and heated-bleed engine systems will be completed during Phase I. Expansion of this effort during the program period will permit a more detailed analysis of the complete engine-control system with the various control subsystem components simulated in more detail. This detailed simulation will supply the control component preliminary design staff with enough information to complete their synthesis on a dynamic compatibility basis. Results of irradiation experiments, such as side-by-side and B-series reactor controls testing, will permit more realistic component dynamic response information to be included in the progressive analog simulation of the complete engine.

All basic control parameters for both the heated- and hot-bleed preliminary design will be determined by October 1962.

In support of the cycle selection, the degree of complexity between the heated- and hot-bleed engine control systems will be compared.

Both digital and analog computer techniques for the analysis of control loop subsystems and components will be used as required.

The study of component cooling requirements will employ both passive and active analog plus digital computers to determine preliminary requirements for engine control component cooling. This will be done prior to both side-by-side and CITS tests.

Comparison of tests vs analytical results will permit a more realistic analysis of the final engine control cooling requirements prior to E-engine tests.

c. Engine Programmer

(1) Status of Phase I Effort

Surveys are being carried out to determine the types of available components which are capable of operating satisfactorily in

the NERVA environment. Schematic designs of logic circuits, amplifier circuits, and bistable and function generator modules have been worked out for fabrication.

(2) Definition of Critical Problems

The development of the engine programmer circuitry (see Figure IV-B-5-2) will be continued with the objective of obtaining a breadboard programmer for the E-3 engine, including such items as sequencers, amplifiers, reference generators, integral checkout circuits, and malfunction circuits. It will perform the functions of startup, steady-state, and cooldown commands with built-in decision-making circuitry for safety and malfunction override.

Electronic gear when operated in a radiation environment generate intolerable noise and voltage level. Design practices which will reduce noise to a tolerable level are at or beyond present state of the art. The required shield to reduce the noise level to an acceptable limit may produce an intolerable weight problem.

(3) Proposed Program

Component and circuitry will be subjected to non-radiation environments, such as humidity and temperature, prior to their selection for use in the side-by-side tests. Based upon the non-radiation tests, side-by-side tests, and information obtained from the controls study and engine simulation on the analog computer, components will be selected and circuits designed and fabricated for testing as subsystems in the CITS tests. (See Figure IV-B-5-2, Item 2.0.)

Prior to the CITS testing, these programmer subsystems will be subjected to non-radiation tests to obtain a high confidence level in their operation.

As a result of the CITS tests, further refinements will be made in the selection of programmer components and circuitry design. The programmer functional requirements will then be firmed up, based on the engine studies performed as described in paragraph IV, B, 5, b.

The breadboard E-3 engine programmer can then be designed to meet the E-3 engine design freeze date of October 1963.

d. Electrical Considerations

(1) Status of Phase I Effort

The electrical harness and connector design studies will be continued. These harnesses and connectors are required to connect the control components and transducers to the engine programmer and to provide all other electrical paths required by the NERVA engine.

Surveys are being carried out to determine the types of available harnesses and connectors which will function satisfactorily in the NERVA environments. Reports have been written summarizing the results of these surveys. At this time stainless steel-clad copper is recommended for use as the conducting material and quartz fabric as the insulating material for the harnesses. A supplier has been selected who appears to possess the background experience and knowledge as well as the capability to deliver connectors as required for the NERVA engine.

(2) Definition of Critical Problems

The major problems are incurred by the radiation-inducing voltage and currents in the harnesses and reduction of the insulating properties of normal materials, especially in vacuum. Methods of joining wire to connectors are peculiar to the NERVA requirement.

(3) Proposed Program

Harnesses and connectors will be procured for the non-radiation environment tests such as high temperature, shock, vibration, vacuum, and humidity, as well as for the side-by-side tests. As a result of these tests, harnesses and connectors will be selected and designed for evaluation in the CITS tests. Analyses of the data obtained from the CITS tests will result in a design freeze for the E-1 engine with parts to be procured and harnesses and connectors delivered in September 1963. See Figure IV-B-5-2, Item 3.

e. Amplifiers

(1) Status of Phase I Effort

The studies for amplifier component selection and amplifier designs are being carried on. Selections have been made for early side-by-side tests. At present, magnetic amplifiers appear to be the most promising since it is desirable to operate with very low impedance circuits.

Surveys are being conducted to determine the other types of amplifier components which may function satisfactorily in the NERVA environment.

(2) Definition of Critical Problems

The major problem is the operation of electronics in a radiation environment. The particular complications involve the production of noise, temperature, and vacuum.

(3) Program Plan

Various amplifier components and circuits will be procured and fabricated for both non-radiation environments, such as temperature, humidity and vacuum, and for radiation environment of the side-by-side in-pile radiation tests. As a result of these tests, at least two designs will be selected and circuits designed for the CITS tests. (See Figure IV-B-5-2, Item 4.)

Analysis of the data obtained from further non-radiation tests and the CITS tests will result in a design freeze for the E engine, with parts to be procured and amplifier to be fabricated for the E-engine tests.

f. Actuators

(1) Status of Phase I Effort

The type of servo actuators being tested at Aerojet consists of an amplifier, torque motor, servo valve, motor, transmission, and position-sensing device for feedback and readout function. The design of these test servo actuators is capable of withstanding the higher radiation environment; however, the actuators being provided for the simulation tests do not have radiation-resistant electrical materials. The tests of these actuators allow establishment of operating characteristics and provide an estimate of the reliability of the components.

Information on bearing tests is being accumulated to help establish the reliability of various types of bearings and retainer configurations. Information on lubricants is being gathered and testing will be done to provide the best lubricant possible for the bearings and gears. Information from other sources where testing has been done on actuators similar to these will be gathered to supplement the tests run at Aerojet.

IV Technical Discussion, B (cont.)

Preliminary studies for the thrust-vector and roll-control actuators is being carried on, based upon the best information available concerning the RIFT requirements.

(2) Definition of Critical Problems

The temperature and radiation environments of the NERVA engine impose severe problems in "obtain-control" actuators which can operate under these conditions.

(3) Proposed Program

Control actuators similar to that being tested at Aerojet will be modified for a radiation environment. These units will be pre-tested to establish their characteristics and performance capabilities; and will then be sent to NTS for side-by-side radiation testing to establish their ability to function within the radiation environment. A complete analysis will be made of the test results to determine if the radiation environment degraded its performance.

The analysis of the data gathered from the side-by-side radiation test will provide much of the data necessary for the specifications of the TVC and roll-control actuators, and will assist in arriving at a design freeze of the TPCV actuator. (See Figure IV-B-5-2, Item 5.)

With reasonably complete specifications available, an alternate program for actuators will be initiated which will provide a study program to achieve the optimum state of the art from the standpoint of reliability, efficiency, and weight. The results of this alternate program will be weighed against the current program to determine the best configuration. Follow-on fabrication of the alternate program will insure delivery of an operational piece of hardware for tests in later phases of the program.

The delivery in January 1963 of the first experimental turbine power-control valve actuator will enable tests to be run to establish the suitability of design and degree of reliability. The first tests on two of these units will be of the limited environmental type. The tests will indicate a design freeze and delivery of further developed turbine power-control actuators. Further testing of two more of these actuators in component irradiation tests will establish the ability of the actuator to withstand the severe radiation environment.

Within the same period as above, preliminary design of roll-control actuators and thrust-vector control actuators will proceed. Experimental actuators (2 each) of both these configurations will be acquired in April 1963 and tested in a limited environment to establish functional characteristics and to determine the need for further improvements. Additional delivery of two of each type of the improved actuators will make possible the testing of these systems in conjunction with their loads in a radiation environment in component irradiation tests (CITS). With information gathered in these tests, a design freeze of the TVC and roll actuators can be made in January 1964 and a degree of confidence will be established for later inclusion of these controls into E-3 engine tests.

During the development period of the roll-control actuator and thrust-vector control actuator, the prototype turbine power-control valve actuator will be fabricated and delivery in October 1963 of two units will be made for inclusion into the E-1 engine test.

Early environmental and functional tests on actuator components and subassemblies will be carried on to demonstrate endurance and operating characteristics. Typical components are transmissions, sliding bearings, rolling bearings, lubricants, and materials. Typical subassemblies are torque motors, valves, torque motor and valve, gear motor, servomotors and emergency devices.

g. Instrumentation

(1) Status of Phase I Effort

Studies are currently being performed on two basic types of transducers to be used for control purposes. These are the temperature probe and the pressure transducer.

A tungsten-26% rhenium - tungsten thermocouple has been selected as the basic thermal sensing element, based upon its relatively high output and its use in radiation environments. Two pressure transducers have been ordered for side-by-side tests.

(2) Definition of Critical Problems

The temperature probe will provide the feedback signal for control of the reactor gas exit temperature. The pressure probe will provide the feedback signal for the chamber pressure control loop. Since both these transducers are operated in very high radiation environments, the results of these developments will be applicable for development of diagnostic instrumentation, as well as the control function.

(3) Program Plan

The thermal-probe development will be concentrated on developing a physical configuration which will be structurally rigid, of high natural frequency, and capable of withstanding both dynamic loading and vibration, and yet able to meet the requirement of a thermal response time of less than 0.5 sec. Thorough analysis of the heat transfer (i.e., conduction losses and thermal radiation effects) will be made on each design. The material chemical compatibility and radiation resistance in the H_2 atmosphere will govern their selection. The electrical properties output, resistance in the leads, and insulation leakage requirements must be met.

A tungsten resistance bulb-type sensing element will be investigated as an alternate technique. Preliminary study indicates that such a probe is feasible and will provide an output in a suitable bridge of 300-mv output vs 35-mv for the thermocouple.

Considerable testing will be made to prove the design concept. In addition to the standard tests, one of the more critical non-radiation tests will be to thermal cycle the probes from -300°F to +3600°F, both in vacuo and in N_2 atmospheres. This test will confirm the calibration stability of the probes. A second critical non-radiation test which will be made is to vibrate the thermal probe at an elevated temperature. This test will confirm the structural design. (See Figure IV-B-5-2, Item 6.)

Radiation tests, both in the CITS and in-pile tests, will be conducted on those designs which succeed in all previous tests. The radiation tests in the CITS will be conducted at approximately 1/10 of the radiation rate as anticipated in the E engine and, thus, an additional in-pile test will be necessary to completely evaluate radiation effects. These tests performed in sequence will give insight on the critical threshold level.

The performance requirements, environmental conditions, and mounting and connector details are being established in order to establish design criteria and working specifications for the transducer manufacturers.

The review of these specifications with potential transducer sources and close coordination with these several sources in upgrading existing designs will be necessary to meet the temperature extremes and high radiation environment.

The selection of a minimum of two sources of potentiometer-type transducer manufacturers will be based upon a thorough examination of these several sources and upon their response to the specification.

IV Technical Discussion, B (cont.)

A strain-gage bridge-type transducer incorporating weldable strain gages which are radiation resistant, and a carrier-type transducer - differential transformer and/or reluctance bridge will be procured.

In non-radiation testing, sensitivity, zero drift, and permanent shift due to thermal cycling to -300°F to +400°F will be investigated, as well as vibration tests and pressure cycling at room and elevated temperatures.

Side-by-side tests, in March 1962, on potentiometer and variable reluctance transducers which are currently available and consist of radiation-resistant materials, will be made. Weldable strain-type transducers will be tested as they become available.

The transducers will be tested with a minimum of a two-step pressure excitation, using a burst diaphragm to check sensitivity and response time during radiation exposure. The results of these tests should provide sufficient information to select instruments for engine tests.

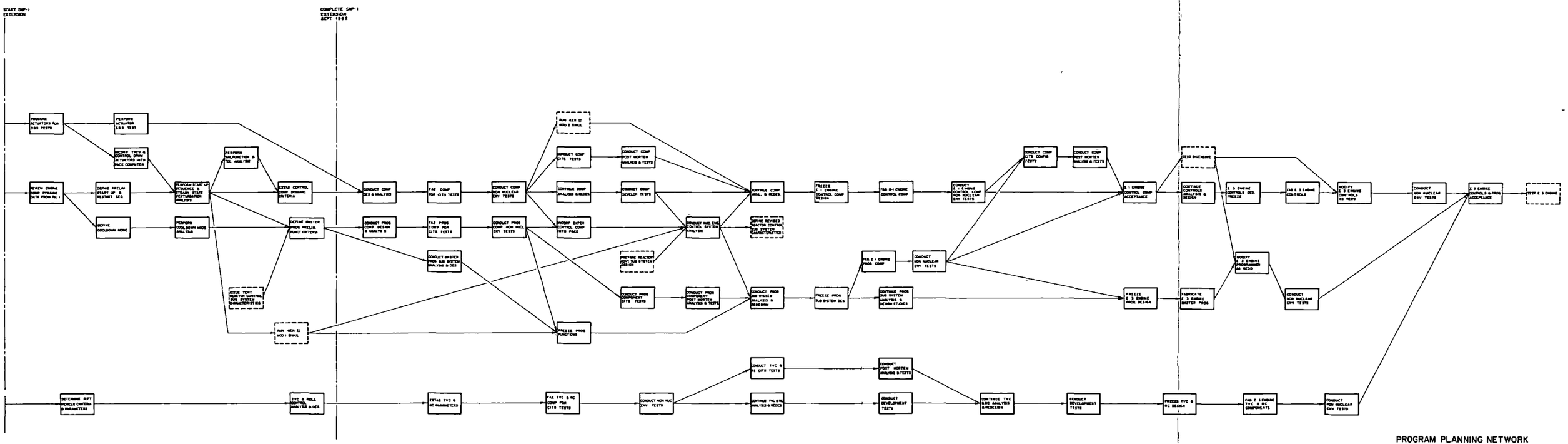

PROGRAM PLANNING NETWORK
SUB-TASK I 5
ENGINE CONTROLS

Fig. IV-B-5-1, Vol. I

NERVA PROGRAM

NERVA
Program Schedules
and
Milestones
11 January 1962 Through 1963

ENGINE CONTROLS

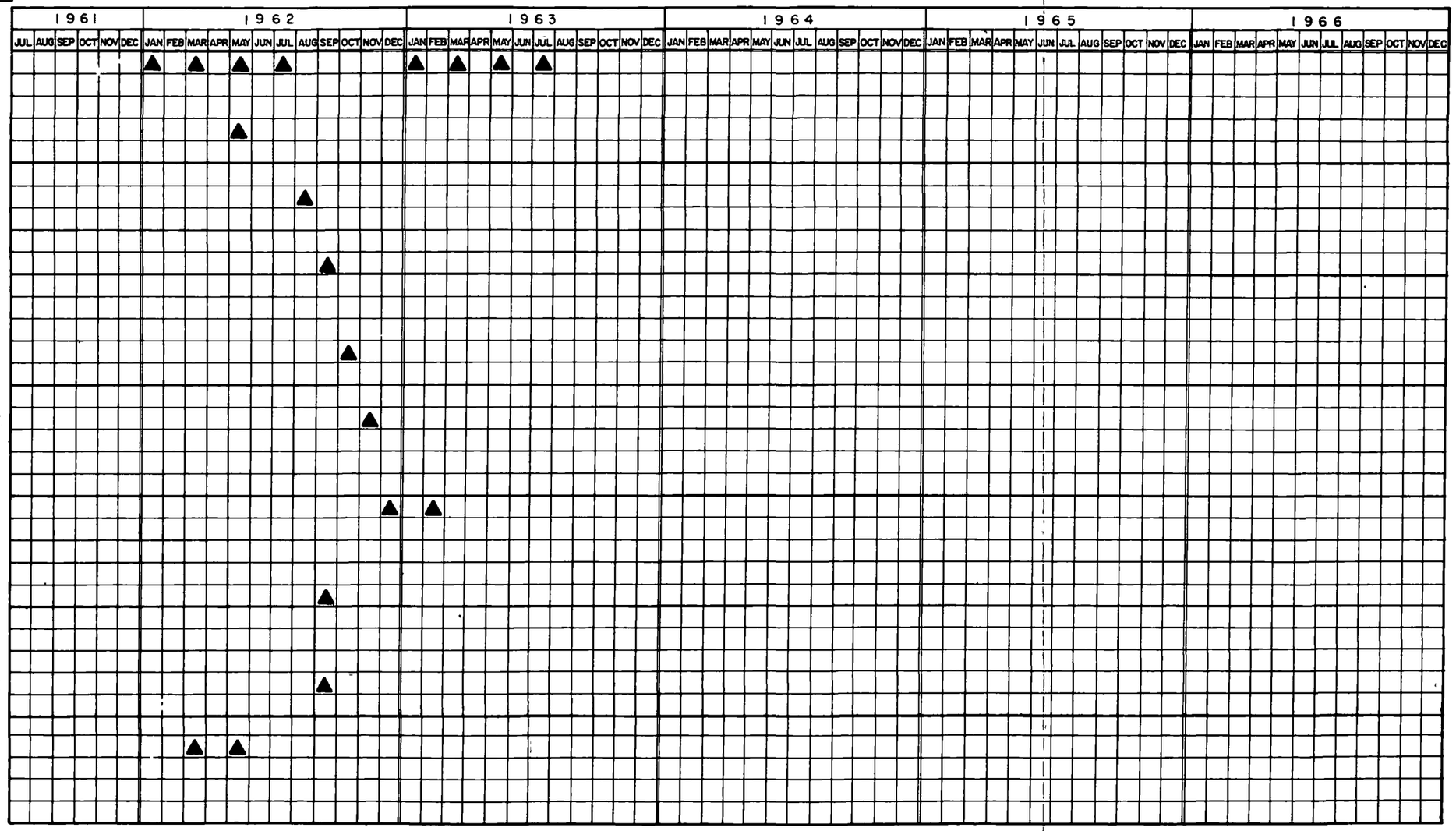

Fig. IV-B-5-2 (Sheet 1), Vol. I

NERVA PROGRAM

NERVA
Program Schedules
and
Milestones
11 January 1962 Through 1963

ENGINE CONTROLS

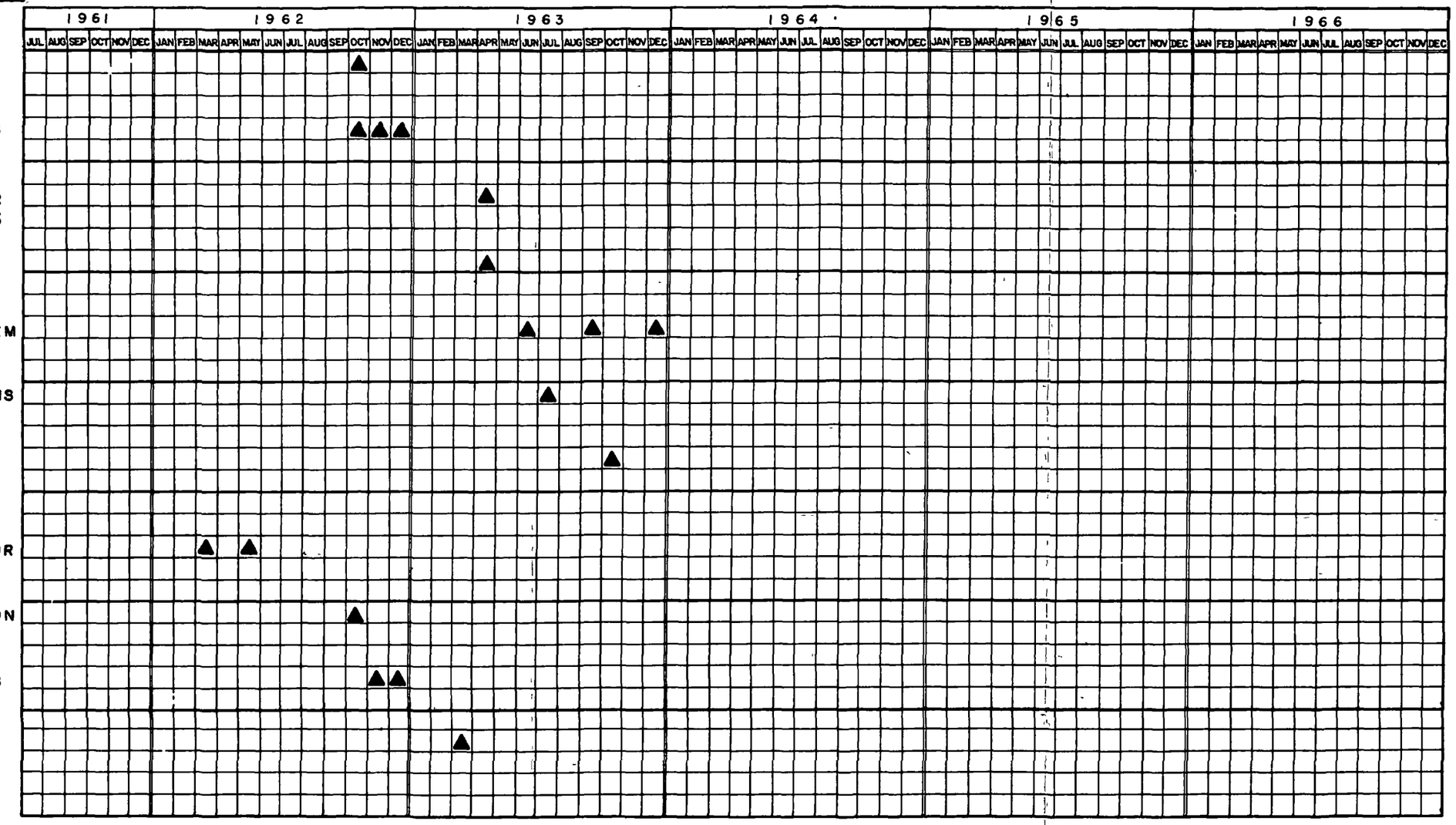

Fig. IV-B-5-2 (Sheet 2), Vol. I

NERVA PROGRAM

NERVA
Program Schedules
and
Milestones
11 January 1962 Through 1963

ENGINE CONTROLS

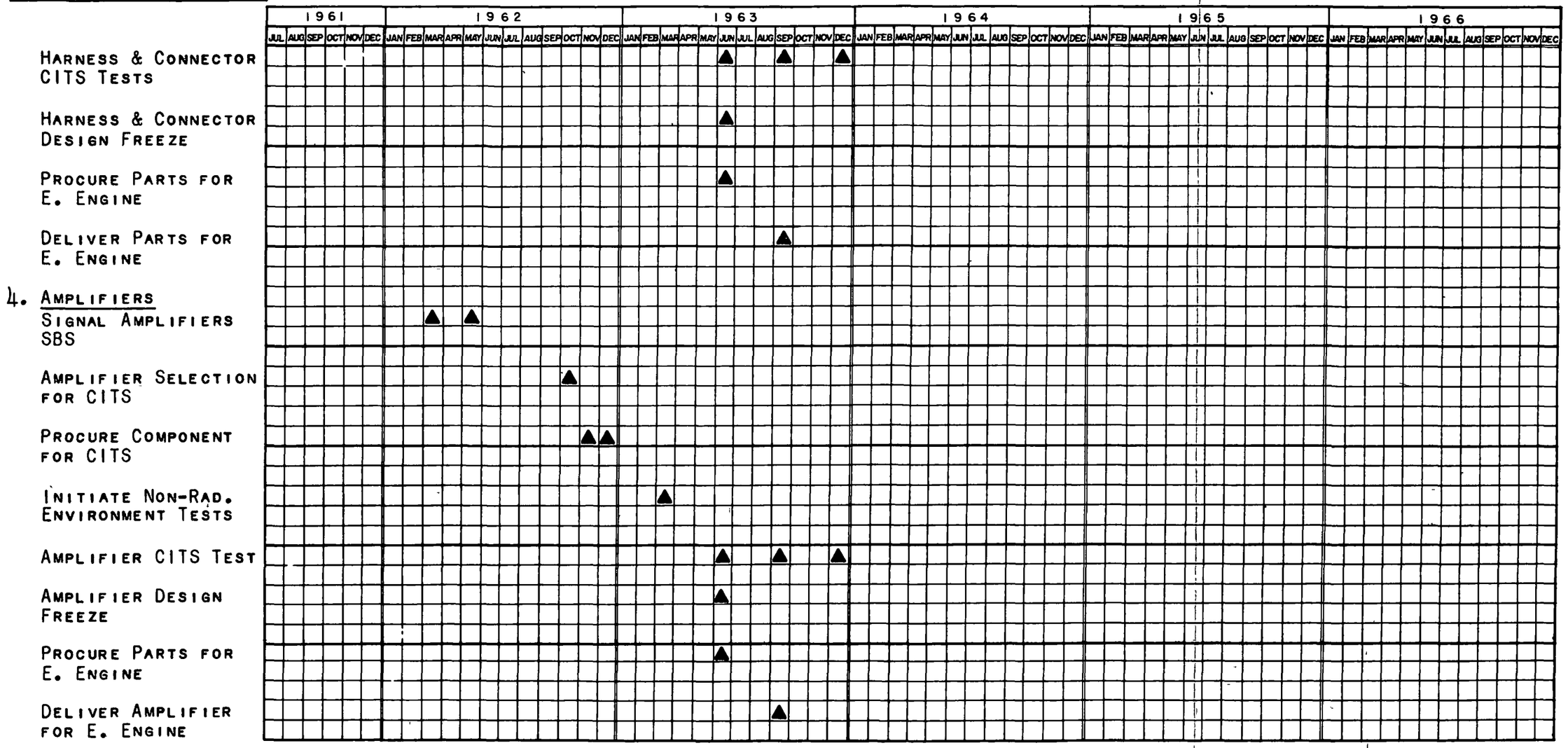

Fig. IV-B-5-2 (Sheet 3), Vol. I

NERVA PROGRAM

NERVA
Program Schedules
and
Milestones
11 January 1962 Through 1963

ENGINE CONTROLS

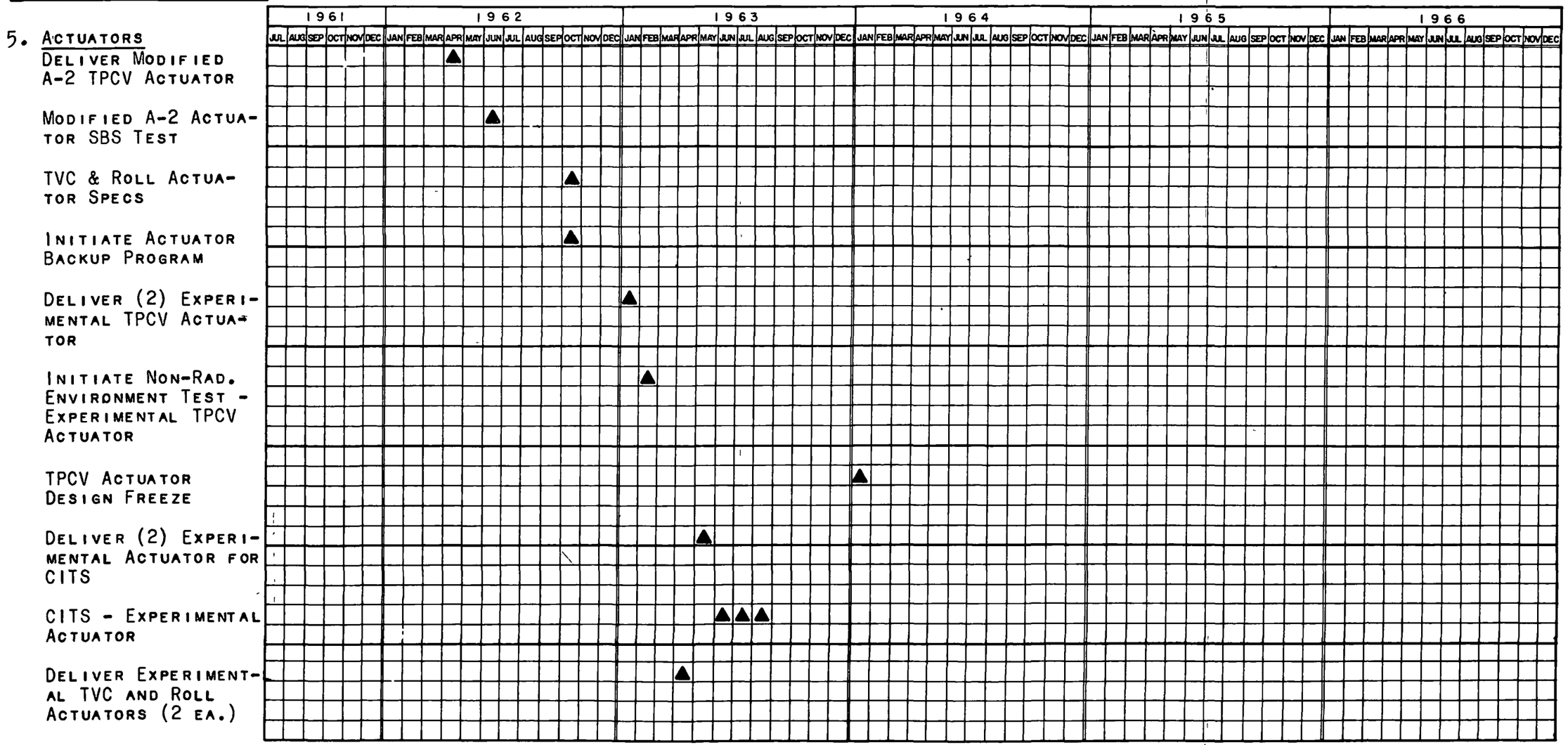

Fig. IV-B-5-2 (Sheet 4), Vol. I

NERVA PROGRAM

NERVA
Program Schedules
and
Milestones
11 January 1962 Through 1963

ENGINE CONTROLS

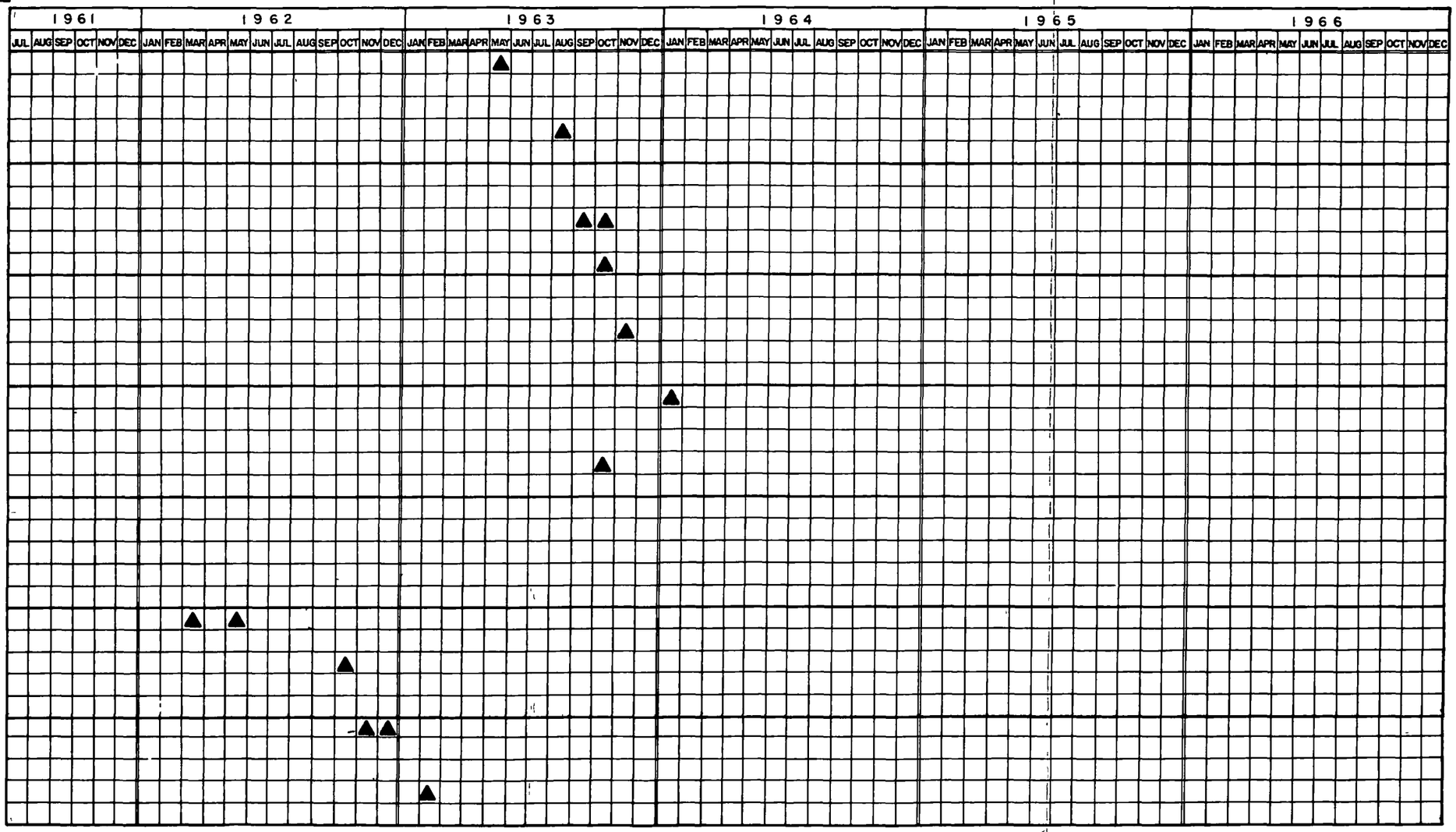

Fig. IV-B-5-2 (Sheet 5), Vol. I

NERVA PROGRAM

NERVA
Program Schedules
and
Milestones
11 January 1962 Through 1963

ENGINE CONTROLS

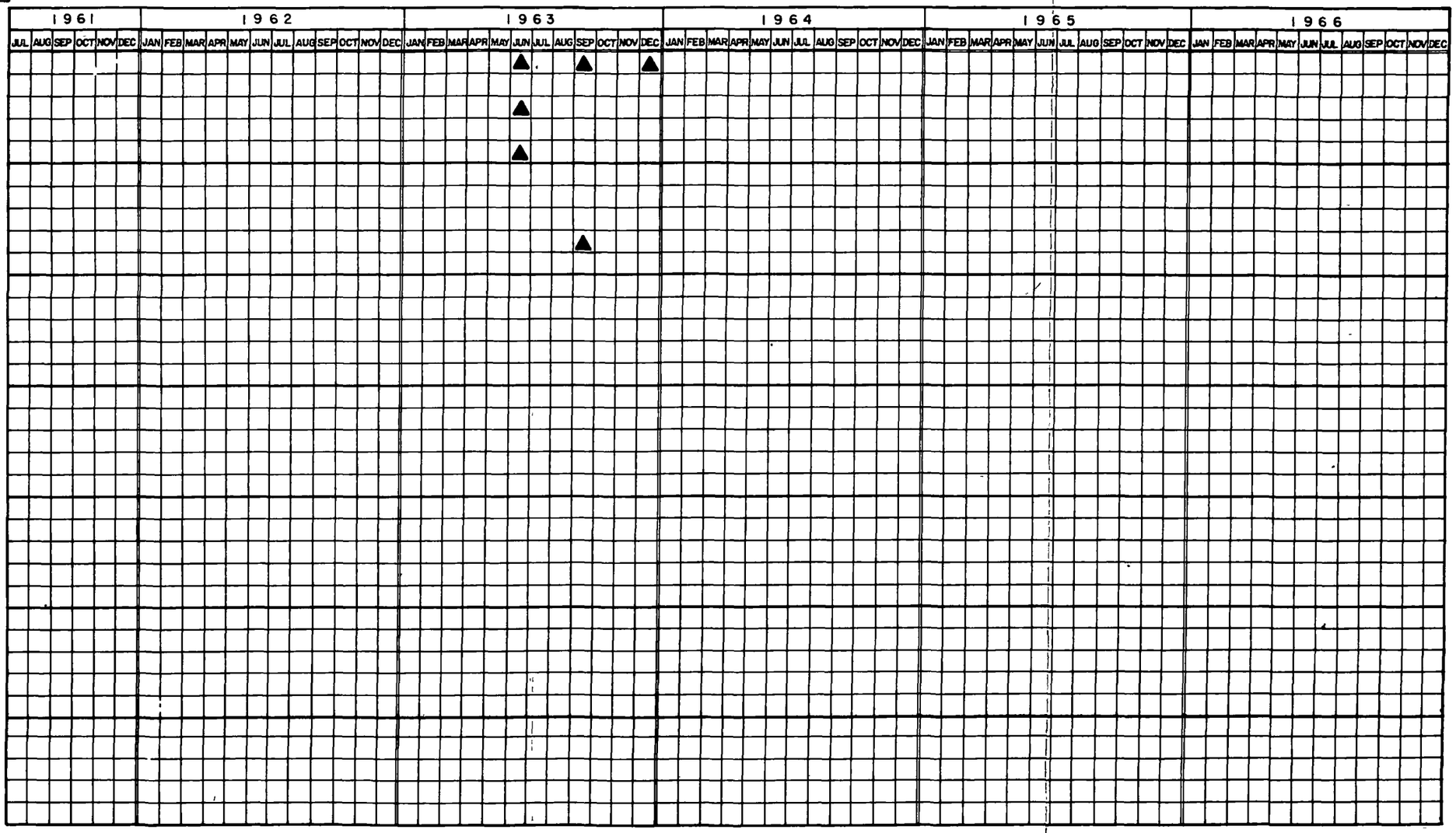

Fig. IV-B-5-2 (Sheet 6), Vol. I

COMPONENT/SUBASSEMBLY TEST SCHEDULE
ENGINE CONTROLS (TASK ITEM 1.5)

Component or Subassembly	Config. No. or Series	Test Objective	Facility	No. of Tests 1962 J	F	M	A	M	J	J	A	S	O	N	D	No. of Tests 1963 J	F	M	A	M	J	J	A	S	O	N	D	Total
Electrical Harness	Mod-1	Side-by-side tests for radiation effects.	NTS			1		1																				2
	Mod-2	CITS – radiation effects.	NTS																		2		2		2			6
	Mod-3	CITS – prototype functional tests for E-engine.	NTS																						1			1
Connectors	Mod-1	Side-by-side tests for radiation effects.	NTS			1		1																				2
	Mod-2	CITS – radiation effects.	NTS																		2		2		2			6
	Mod-3	CITS – prototype functional tests for E-engine.	NTS																						1			1
Amplifiers	Mod-1	Functional and environmental tests to evaluate design.	Azusa			9	5		5																			19
	Mod-1	Side-by-side tests for radiation effects.	NTS			2			2																			4
	Mod-2	Functional and environmental tests to evaluate advanced design.	Azusa													7	7	7										21
	Mod-2	CITS – radiation effects.	NTS																		2		2		2			6
	Mod-3	Functional tests of E-engine prototype.	Azusa																						4			4
	Mod-3	CITS – radiation effects.	NTS																						4			4
Instrumentation Controls – Temperature Transducer	Mod-1	Functional evaluation of design.	Azusa	11	11																							22
	Mod-1	Side-by-side tests in radiation environment.	NTS			1		1																				2
	Mod-2	Functional and environmental tests to evaluate design improvements.	Azusa											14	18	22	10											64
	Mod-2	CITS – radiation effects.	NTS																		4		4		4			12
	Mod-3	Functional tests of E-engine prototype.	Azusa																						4			4

Fig. IV-B-5-3 (Sheet 1), Vol. I

COMPONENT/SUBASSEMBLY TEST SCHEDULE (Continued)
ENGINE CONTROLS (TASK ITEM 1.5)

Component or Subassembly	Config. No. or Series	Test Objective	Facility	No. of Tests 1962 J	F	M	A	M	J	J	A	S	O	N	D	No. of Tests 1963 J	F	M	A	M	J	J	A	S	O	N	D	Total
Instrumentation Controls – Temperature Transducer (cont.)	Mod-3	CITS – radiation effects.	NTS																							4		4
Instrumentation Controls – Pressure Transducer	Mod-1	Functional evaluation of design.	Azusa	11	11																							22
	Mod-1	Side-by-side tests in radiation environment.	NTS			1	1																					2
	Mod-2	Functional and environmental tests to evaluate design improvements.	Azusa												14	18	22	10										64
	Mod-2	CITS – radiation effects.	NTS																		4		4		4			12
	Mod-3	Functional tests of E-engine prototype.	Azusa																						4			4
	Mod-3	CITS – radiation effects.	NTS																							4		4
Roll Control Actuator	Mod-2	Performance evaluation (steady state and dynamic response) at room temperature. Environmental functional testing for thermal shock and thermal transient, vibration, sustained acceleration, and simulated radiation environment. Humidity life tests (reliability).	Bendix														2	4	8	10	10	15	15	10	10			84

Fig. IV-B-5-3 (Sheet 2), Vol. I

COMPONENT/SUBASSEMBLY TEST SCHEDULE (Continued)
ENGINE CONTROLS (TASK ITEM 1.5)

Component or Subassembly	Config. No. or Series	Test Objective	Facility	No. of Tests 1962 J	F	M	A	M	J	J	A	S	O	N	D	No. of Tests 1963 J	F	M	A	M	J	J	A	S	O	N	D	Total
Engine Programmer	Breadboard Mod-1	Test basic circuitry design in non-radiation environment and functional operation for selection for further refinement.	Azusa		17		7																					24
	Mod-2	Side-by-side tests to evaluate radiation effects.	NTS			1		1																				2
	Mod-3	Environmental and functional tests of advanced design.	Azusa														29											29
	Mod-3	CITS — radiation environment.	NTS																		1			2			3	6
	Mod-4	Functional and environmental tests for final breadboard design (E-engine prototype).	Azusa																				23	37	37	37		134
Thrust Vector Control Actuator	Mod-1	Nonradiation functional and environmental tests.	Azusa															6	7	7	9							29
	Mod-2	CITS — radiation environment.	NTS																				2	4	4			10
	Mod-3	Functional tests — for acceptance.	Azusa																					2	2			4
	Mod-3	CITS — radiation environment.	NTS																					2	2			4
Roll Control Actuator	Mod-1	Nonradiation functional and environmental tests.	Azusa															6	7	7	9							29
	Mod-2	CITS — radiation environment.	NTS																				2	4	4			10
	Mod-3	Functional tests — for acceptance.	Azusa																					2	2			4
	Mod-3	CITS — radiation environment.	NTS																							2	2	4
Turbine Power Control Valve Actuator	Mod-1	Functional tests — nonradiation environment.	Azusa					3	5																			8
	Mod-1	Side-by-side tests in radiation environment.	NTS						1																			1

Fig. IV-B-5-3 (Sheet 3), Vol. I

COMPONENT/SUBASSEMBLY TEST SCHEDULE (Continued)
ENGINE CONTROLS (TASK ITEM 1.5)

Component or Subassembly	Config. No. or Series	Test Objective	Facility	No. of Tests 1962 J	F	M	A	M	J	J	A	S	O	N	D	No. of Tests 1963 J	F	M	A	M	J	J	A	S	O	N	D	Total
Turbine Power Control Valve Actuator (cont.)	Mod-2	Functional and environmental tests — nonradiation.	Azusa													11	11	11	11									44
	Mod-3	Acceptance tests — functional.	Azusa															3										3
	Mod-3	CITS — radiation environment.	NTS																		5	5	5					15
	Mod-4	Prototype functional tests for E-engine.	Azusa																						2			2
	Mod-4	CITS — radiation environment.	NTS																							2		2
Actuator Components Transmissions Sliding Bearings Rolling Bearings Lubricants Materials	Mod-1	Extreme temperature evaluation of environmental (nonradiation) and functional performance for design selection.	Bendix	8	15	15	20	25	30	50	60	40	30	30	30	20	20	20	15	15	15	15	15	15	15	15	15	548
Actuator Subassemblies Torque Motor Valve Torque Motor - Servo Valve Gear Motor Servo Motor Transmission Emergency Devices	Mod-2	Performance evaluation (steady state and dynamic response) at room temperature. Environmental functional testing for thermal shock and thermal transient, vibration, sustained acceleration, and simulated radiation environment. Humidity life tests (reliability).	Bendix				5 10 15	5 10 15	5 10 15 10 25 10	10 25 10	7 6 15 15 5 6	7 6 15 15 5 6	7 6 15 15 5 6			7 10 20 20 5 12	7 10 20 20 5 12	7 10 20 20 5 12 4	7 10 15 20 5 12 4	7 10 15 20 10 18 8	7 10 15 20 10 18 8	7 10 15 20 10 18 8	7 10 15 15 10 18 8	7 10 15 15 10 18 8	7 10 15 15 10 12 6	7 10 15 15 5 12 6	120 168 290 280 155 212 70
TPCV — Actuator	Mod-2	Performance evaluation (steady state and dynamic response) at room temperature. Environmental functional testing for thermal shock and thermal transient, vibration, sustained acceleration, and simulated radiation environment. Humidity life tests (reliability).	Bendix						15	15	10	10	10			10	10	10	10	10	10	10	10	10	10	10	10	180
Thrust Vector Control Actuator (Gimbal Actuator)	Mod-2	Performance evaluation (steady state and dynamic response) at room temperature. Environmental functional testing for thermal shock and thermal transient, vibration, sustained acceleration, and simulated radiation environment. Humidity life tests (reliability).	Bendix																2	4	8	10	10	15	15	10	10	84

Fig. IV-B-5-3 (Sheet 4), Vol. I

6. Destruct Subsystem

a. Description of Problem Area

This portion of the program is concerned with satisfying, by explosive means, two basic NERVA safety requirements. (1) In the event of an accident or malfunction involving the NERVA reactor prior to its operation, the reactor must be rendered essentially harmless, and (2) the fission products which are generated during operation of the reactor must be disposed of in a satisfactory fashion.

Other aspects of the problem of disposal of fission products are also discussed in Section IV-C-5 (Safety).

Although other methods are also being considered, the destruction of the NERVA reactor core by the appropriate application of high explosives presently appears to offer considerable promise. Explosives have the advantage of rapid reaction time, high-energy per unit weight, and a long history of successful employment as a primary mode of destruct for missiles and space craft. In common with many other materials, however, explosives have the disadvantage of being affected adversely by excess thermal and radiation flux, thus limiting the kinds of explosives which can be used, the duration of exposure, and the distribution and method of application

b. Status of Problem

In the program to date, efforts have been directed toward the determination of the major problem areas, the performance of fundamental analysis, and on the development of conceptual designs for integrating possible destruct techniques into the preliminary engine design. These concepts and their problems are discussed in Aerojet-General Special Report No. 2151.* Efforts have been or are underway by the Rover Safety Panel, AEC Germantown, and Los Alamos Scientific Laboratory. A limited number of preliminary experiments have been performed at LASL, Aberdeen Proving Ground has also started an experimental program.

However, it is not presently possible, either on the basis of the preliminary experiments which have been conducted, or on the basis of the state of knowledge in explosive or ordnance technology, to conclude that any of the conceptual designs are either feasible or infeasible.

---

*Destruct Subsystem for NERVA Engine, 7 December 1961 (Confidential-RD)

Because there is presently no clear-cut indication of feasibility, it is evident that considerable quantitative data is needed before a destruct system development program can start. In particular, the kind and approximate quantity of explosive needed, the approximate requirements for storage, shielding and the location and shape of the explosive charge or charges must be determined before a destruct concept can be considered feasible.

c. Program Forecast for Problem Solution

This section contains a description of the program to be conducted during the 9-month program period, and a discussion of the tasks to be completed through the end of 1963. Figure IV-B-6-1 shows the program planning network for Task Item 1.6, and Figure IV-B-6-2 shows the milestones. The hardware and test-schedule charts for this period are presented in Figures IV-B-6-3 and IV-B-1-6, respectively. The major mileposts in the 9-month program are discussed in the Technical Administrative Document 1.6, Section III of Volume II. During the next 9 months of the program the following tasks will be performed.

(1) Fragmentation Analyses and Experiments

(a) Feasibility Determinations

Several concepts have been suggested by various sources for achieving the destruction of the reactor. While pre-operation destruction of the reactor appears to be a tractable problem, the feasibility of any of the presently conceived concepts for post-operation destruction of the reactor must be demonstrated. It is necessary, therefore, to conduct experiments and analyses to evaluate the feasibility of various basic concepts which may be employed.

In addition to the central burster experiments which have been performed at LASL, it is proposed to perfrom feasibility experiments and analyses at Aerojet with other basic concepts which appear to have at least as much potential at this time. These concepts involve the use of charges of explosive placed external to the reactor, and fracturing the core with energy transmitted either by shock or by shaped-charge action.

(b) Quantitative Experiments

In order to prepare preliminary designs, considerable additional data will be required regarding the breakup mechanism. Quantitative experiments and analyses will therefore be performed to provide detailed information upon which to base the design and initial reliability evaluation of the destruct system. The exact nature of these studies will, of

course, be determined by whichever concept is shown by the feasibility experiments to be most promising, but the general object of the experiments and the number to be conducted will be fairly similar in all cases.

The final design of the destruct system will be based on results of these experiments.

(2) Studies of Radiation Effects

There is a practical limit to the amount of extra shielding which can be installed to protect the explosives from radiation. It is therefore necessary to carefully examine the effects of radiation, initially for the purpose of assessing whether or not the destruct system can be located in reasonable positions with feasible amounts of shielding, and ultimately to provide the basis for shielding design, explosive selection, and reliability determination.

Results of past and current experiments by other investigators will be analyzed and extended where applicable to the NERVA situation. In addition, certain critical experiments will be designed and performed. The objective of these experiments will be to assess the effects - for example, degradation, gassing, loss of energy, and increase in sensitivity - of NERVA environment (in particular, the radiation field) on typical explosives which may be used in the NERVA destruct system.

The program outlined here has been designed to meet the requirements which are presently anticipated. However, as additional data regarding the reactor or the explosives (or both) becomes available, changes may be made. It must be emphasized that it is not enough to know that an explosive lost some energy upon radiation, sensitivity to shock and detonation velocity must also be determined, so that a truly efficient and reliable device may be developed.

A modular experiment will be designed. First, several explosive configurations will be exposed to a known radiation field for a known time. Integrated neutron flux and gamma flux will be measured within the module. Temperature rise of each specimen will be recorded remotely. A three-point energy spectrum of the incident neutrons will be made by including gold and indium foils and sulfur specimens in the modules. Subsequent activation analysis will determine the rough neutron energy spectrum that was incident on the test specimens of explosives. Gas evolution will be determined by a dilatometric observation. After exposure, small samples of the explosive will be tested for detonation velocity, energy content, and sensitivity.

The tasks to be performed after September 1962, but prior to January 1964, include:

(3) Preliminary Mechanical Design, Destruct System

The preliminary design effort for the mechanical portions of the destruct system will consist of two separate programs, one for the pre-operational system and one for the post-operational destruct system.

The preliminary design effort for the pre-operational destruct system will be directed toward the production and testing of a system to demonstrate the validity of the concept. This demonstration will require a simulated engine, although it is expected that unloaded graphite will be used. The post-operational destruct system design presents greater problems. Not only is its task (completely disintegrating the reactor core) one of great difficulty, but, due to its post-reactor operation, all of its components are subject to the radiation effects of the full engine operating period. Because of this, all destruct system components and materials must be either impervious to radiation effects, or properly shielded from them.

The seriousness of the design problem is recognized. For instance, it is certain that extensive radiation effect tests will have to be conducted on many components. The CITS Program will be fully utilized for this purpose. In addition, many of the components of the system will undoubtedly have to be carried, prior to use, in a shielded area forward of the engine and then moved by hydraulic or mechanical means to the more immediate vicinity of the reactor just prior to initiation. The problem here is to provide a reliable system of minimum mass that will not seriously affect the gimballing characteristics of the engine proper.

(4) Preliminary Design, Destruct Control System

Electronic controls for the destruct systems will consist of command receivers, function programmers, sequence interlocks, firing circuits, power supplies, transmission lines, and supporting hardware, such as packages, connectors, and mountings. The first design efforts will be directed toward establishing operating environmental conditions. These environmental data will define specific design problem items. Solutions to these problems will include the tasks listed in the following paragraphs.

(a) The capacity of basic components to withstand radiation effects must be determined from literature and tests.

IV Technical Discussion, B (cont.)

(b) Determination of which of the potential components and system configurations is most practical for use on the NERVA in terms of providing reliable performance, is most adaptable and flexible to installation variations, is capable of providing adequate endurance in extremes of operational environments, and is capable of giving adequate performance with state-of-the-art components.

(c) Selection of system elements must be made so that these elements may be used to accumulate reliability statistics by repeated use in firing explosive tests.

(d) Fabrication of a preliminary system, for environmental system tests, must be completed.

(e) Components and modules must be subjected to radiation tests through use of the CITS program.

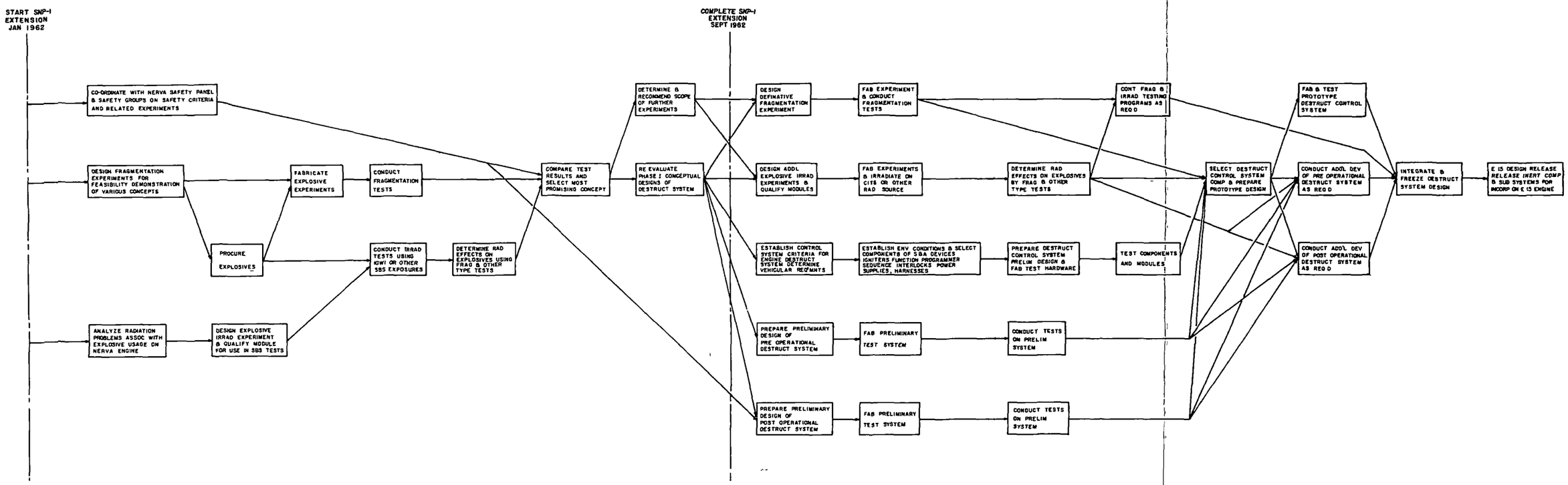

PROGRAM PLANNING NETWORK
SUB-TASK 16
DESTRUCT SYSTEM

Fig. IV-B-6-1, Vol. I

NERVA PROGRAM

DESTRUCT SYSTEM

NERVA
Program Schedules
and
Milestones
11 January 1962 Through 1963

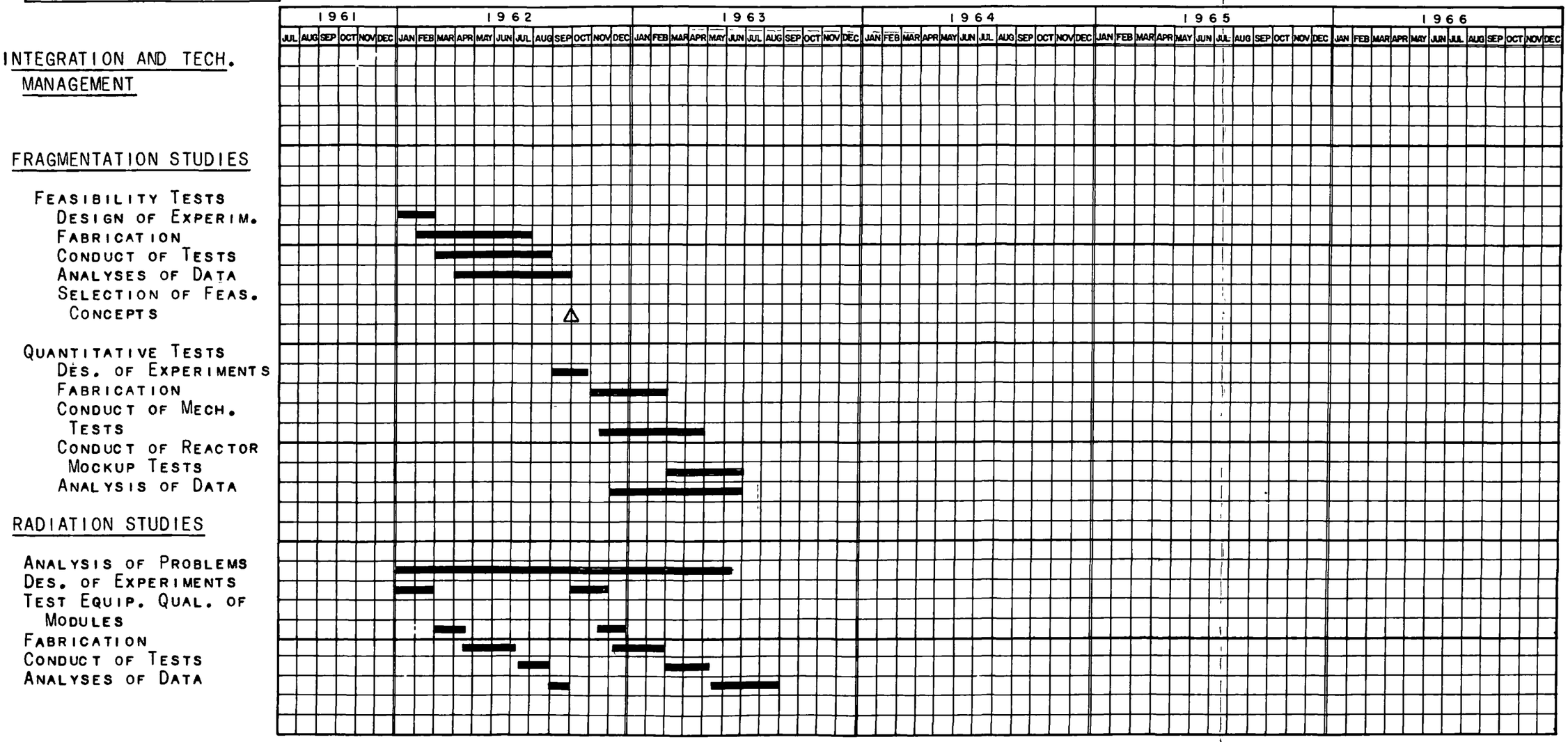

Fig. IV-B-6-2 (Sheet 1), Vol. I

NERVA PROGRAM

NERVA
Program Schedules
and
Milestones
11 January 1962 Through 1963

DESTRUCT SYSTEM

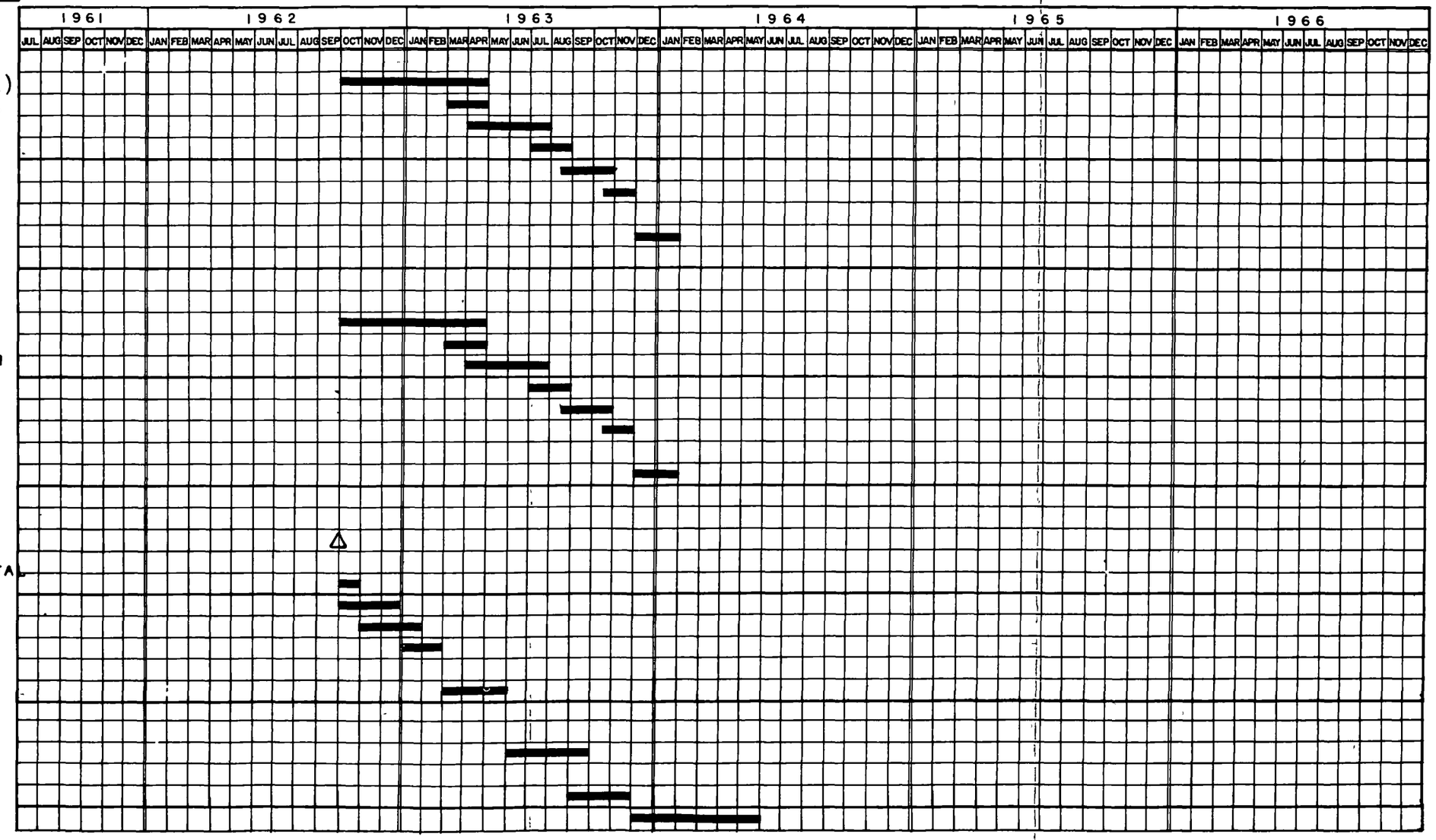

Fig. IV-B-6-2 (Sheet 2), Vol. I

7. Pneumatic Power Supply

a. System Description

The pneumatic supply (shown schematically in Figures IV-B-7-1, IV-B-7-2, and IV-B-7-3) is an auxiliary power system that supplies actuation gas to the various pneumatic and electropneumatic actuation devices. Gaseous hydrogen has been selected as the actuation medium because of its performance, availability, and relative compatibility with the environments produced by the NERVA engine and with the environments in which this engine is expected to operate. The most incompatible aspect of environment is encountered on the ground during the engine-development phase, when there is a possibility of explosion by combination with oxygen from the atmosphere.

The pneumatic requirements are based on the sequence of actuation of the various control devices during all normal modes of engine operation, and on the flow rate-time character of the various actuators involved in these operational sequences. The pneumatic supply system receives hydrogen gas directly from the shield plenum when the engine is developing sufficient pressure. During this period, the gas from the plenum operates the various actuators and recharges the pneumatic storage tanks. Actuation gas is required not only when the engine is producing thrust, but also during specific periods when no thrust, or insignificant thrust, is produced.

(1) Actuators

The electropneumatic actuators presently considered for use on the NERVA engine, have been designed to operate with a pressure differential of 150 psia, and are the principal users of almost all the gas needed by the system. Since these are gear-motor-type actuators, the flow rate is nearly constant regardless of gas temperature variations. Gas consumption rate will be higher at low rather than at higher temperatures, because of variations in density of the gas. GH_2 can be taken from the plenum at various temperatures and combined to obtain the temperature that will give most efficient use without raising the temperature of the actuators. Gas will be supplied to the electropneumatic actuators at 215 psia, permitting supply from the plenum as soon as this pressure is attained. In addition, use of this low-pressure gas in turn assures maximum use of bottled gas.

(2) Possible System Variations

Several system variations are under consideration. Since reliability is a major consideration, a redundant or partially redundant system will be used, until it is determined that redundancy is no longer needed.

IV Technical Discussion, B (cont.)

Three schematics of the pneumatic supply system are included.

Figure IV-B-7-1 shows a redundant supply system. This system is composed of two identical systems, each consisting of a storage subsystem, ground-charging subsystem, a pressure regulator controlling the pressure from the storage tank, a pressure regulator controlling the pressure from the plenum, a back-pressure regulator to maintain a constant pressure drop through the electropneumatic actuators, an engine-charging subsystem, a gas distribution system, and a temperature regulating system, if needed. This system provides the greatest degree of reliability of all systems, complete failure occurring only when there is simultaneous failure of the same component of each system; however, this is the heaviest of all systems described.

Figure IV-B-7-3 shows a pneumatic supply system with redundant storage systems. In this system, unregulated actuation gas is supplied directly from the plenum to the tank shutoff valve actuator. The system has the same components as has the redundant supply system. Redundant storage increases the reliability of the storage subsystem, requiring a simultaneous failure of the two storage systems for malfunction of the overall system to occur. Such redundancy is desirable in space applications, where the storage tanks may be damaged. Direct actuation gas from the plenum to the shutoff valve actuator maintains the tank shutoff valve open when the engine is developing full power, even though failure may occur in other components. The solenoid valve arrangement shown in the distribution system insures that the rod-control actuators are capable of being operated prior to the opening of the tank shutoff valve. This system has a high degree of reliability and weighs less than the redundant system previously described.

Figure IV-B-7-2 shows a pneumatic system with emergency recharging capabilities, using direct actuation gas supplied from the plenum to the tank shutoff valve actuator. In this system, as in the redundant storage system, there are two solenoid valves in line to assure that the rod-control actuator is always pressurized ahead of the tank shutoff valve. The emergency recharging system will deliver gas to the actuator when the storage tank cannot provide sufficient gas during the engine-off periods.

Various methods for generating gas on a demand basis are under study. Emergency methods depend upon conversion of liquid to gaseous hydrogen. This system offers a high degree of reliability coupled with considerable weight savings, but it will require more development to make the system operational than either of the two systems previously described.

The pneumatic supply system is composed of subsystems which provide for

(1) Storage of actuation gas

(2) Ground charging of storage tanks

(3) Engine recharging of storage tanks

(4) Emergency recharging of storage tanks

(5) Supplying actuation gas directly from the engine

(6) Pressure regulating of supply and exhaust gas

(7) Gas distribution

(8) Filtering of the gas

b. Status of Development of Subsystems Accomplished in Phase I

(1) Storage Subsystems

Preliminary analyses have been made to determine the size of the gas storage system. These analyses were based upon calculated gas consumption rates for the various actuators, and are subject to revision as the control requirements are more rigorously defined.

(2) Ground-Charging Systems

Quick-disconnect couplings, required for ground charging the storage tanks prior to E-3 engine operation, must be developed to operate in a radiation environment. Adequate dynamic sealing is the main development problem. These disconnects are required early in the engine development program to facilitate remote removal of the engine from the test stand.

(3) Engine-Recharging Subsystem

Specifications for the check valves and the shutoff valves have been completed, and requests for proposals have been sent to component manufacturers. It is anticipated that initial engine development

tests can be conducted with shielded components. Check valve seals present some of the same development problems that are found in the quick disconnect.

(4) Emergency-Recharging Subsystem

An emergency recharging system is being studied as an alternative to a redundant pneumatic supply system. The selection of which of these approaches to be adopted will be based upon comparative reliability analysis.

(5) Pressure-Regulating Subsystem

Regulator pressures are being studied and preliminary pressure values have been set. Further work is needed to make better use of the available gas.

(6) Gas-Distribution Subsystem

A gas distribution subsystem is being studied. This system is required to stop the quiescent flow of gas through the actuators when operation of the actuators is not required during the launch and coast periods. Development of radiation-tolerant solenoids for the shutoff valves is expected to be assisted by results of the materials research previously conducted for the benefit of radiation-tolerant torque motors.

c. Principal Development Areas

Although not required for the first engine tests, the radiation-tolerant solenoids for use in the shutoff valves and adequate dynamic seals for use in quick disconnect couplings, in check valves, and in pressure regulators, will all require extensive development.

(1) Quick-Disconnect Couplings

The quick disconnect couplings that may be needed to connect the actuation gas distribution lines on the first NERVA engine to the gas supply of the test stand must be developed.

The development of these couplings will be achieved in two phases. In the first phase, commercially available disconnects will be modified, probably by substitution of more radiation-tolerant seal materials and by the addition of local shielding. In the second phase, flight-type disconnect will be developed.

IV Technical Discussion, B (cont.)

(2) All-Metal Dynamic and Static Seals

Dynamic metal seals will require an extensive development effort. Present commercial dynamic seals are unsuitable for NERVA application, either because of excessive leakage, or because they depend upon elastomers which have low radiation tolerance. Various dynamic seal configurations must be evaluated, and the more promising ones must be developed and incorporated into the disconnect couplings.

Static metal seals are also needed. Various commercial static seals are available, but an evaluation must be made to determine reliability, leakage rate, and adaptability for use in a radiation environment.

(3) Design Approaches for Principal Components

Two possible approaches will be made to aid in solving the quick-disconnect sealing problem: the use of a static-type seal to seal the disconnect after mating or, if the static type sealing arrangement proves unsatisfactory, a dynamic lip seal, similar to those discussed in IV-B-2, will be developed. Static seals have low deflection; this necessitates a high degree of accuracy on the various parts of the disconnect in order to provide sufficient loading, under all tolerance conditions, necessary for good sealing. Dynamic lip seals have a greater degree of flexibility than static seals, but the concept must be proven.

d. Program Plan

(1) 11 January through 30 September 1962 Program

Because no development unique to the pneumatic supply system is required during the next nine months, only analysis and design will be performed. Effort during this period is described in the Technical Administrative Document Task Item 1.7 in Volume II.

(2) After September 1962

Based upon the seal development program conducted as a part of the propellant feed system developments and on the analysis, design, and vendor activities previously performed, a parallel development on the various components will be conducted. As indicated on the Program Planning Network for Sub-Task 1.7 through a series of development-test cycles, each of the components will first be proven

under all non-nuclear conditions and then will be subjected to test on the CITS assembly. Following additional cycles of development, each of the components of the pneumatic power supply will be ready for incorporation into the engine development program. A program planning network for the pneumatic supply system development is shown in Figure IV-B-7-4; the milestones and schedules are indicated in Figure IV-B-7-5.

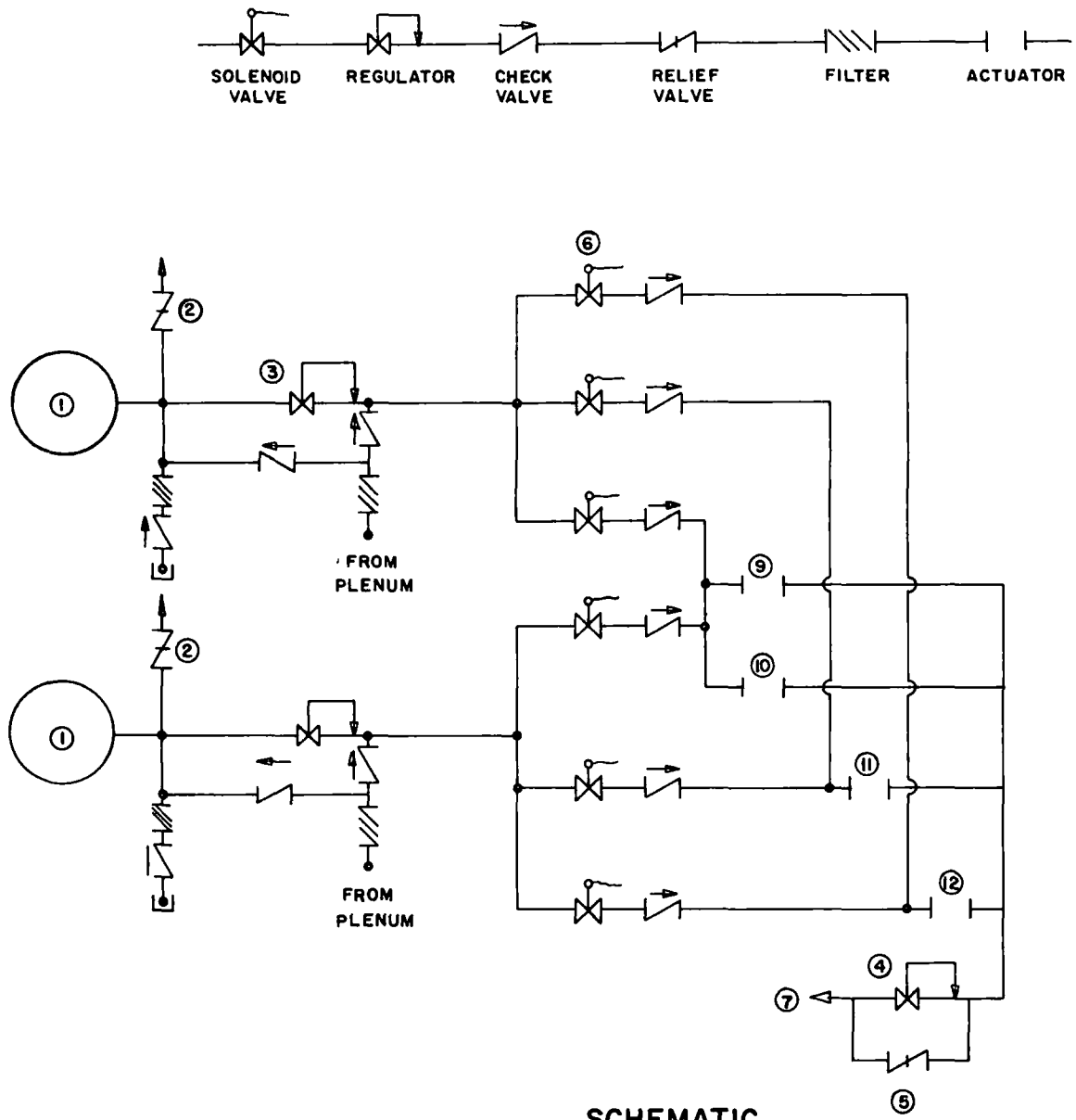

① STORAGE TANKS
② PRESSURE RELIEF VALVE
③ STORAGE TANK REGULATOR
④ BACK PRESSURE REGULATOR
⑤ RELIEF VALVE BY PASS
⑥ SHUT OFF VALVE
⑦ TO TANK PRESSURIZATION SYSTEM
⑧ GROUND CHARGING OF STORAGE TANKS
⑨ TSVC ACTUATOR
⑩ TPCV ACTUATOR
⑪ ROLL CONTROL ACTUATORS
⑫ TVC ACTUATORS

SCHEMATIC
PNEUMATIC SUPPLY SYSTEM
REDUNDANT TYPE

Fig. IV-B-7-1, Vol. I

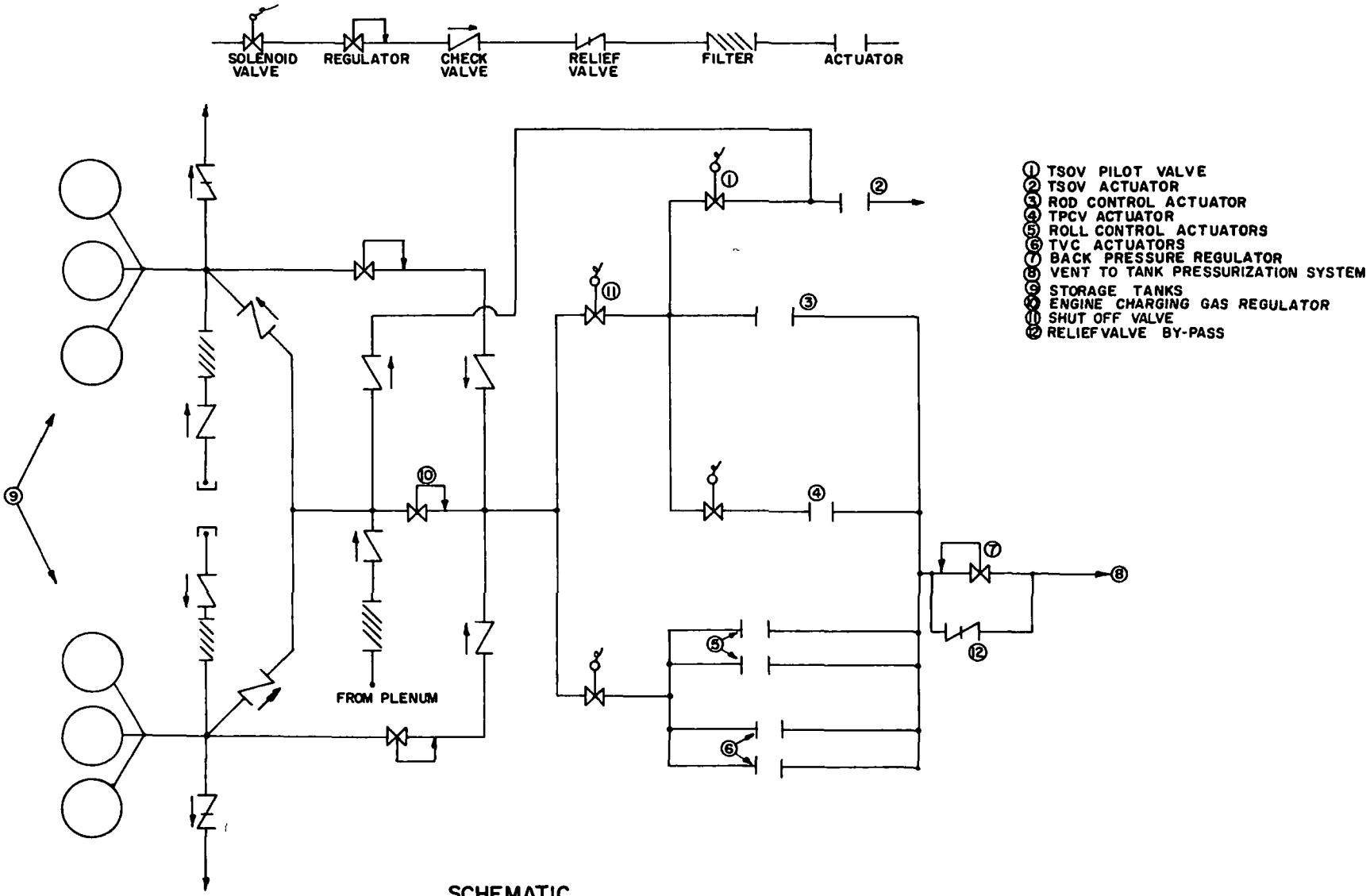

SCHEMATIC
PNEUMATIC SUPPLY
SYSTEM
(REDUNDANT STORAGE)

Fig. IV-B-7-2, Vol. I

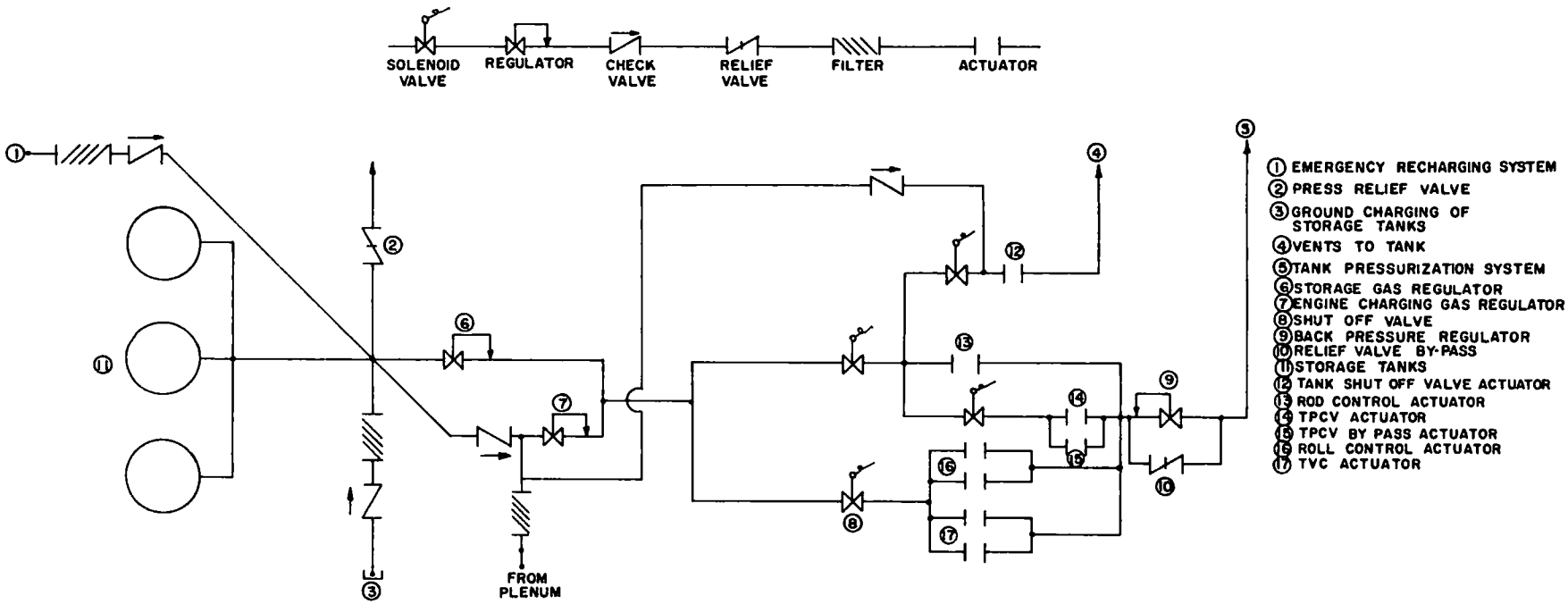

SCHEMATIC
PNEUMATIC SUPPLY
SYSTEM
(EMERGENCY RECHARGING)

Fig. IV-B-7-3, Vol. I

CONFIDENTIAL

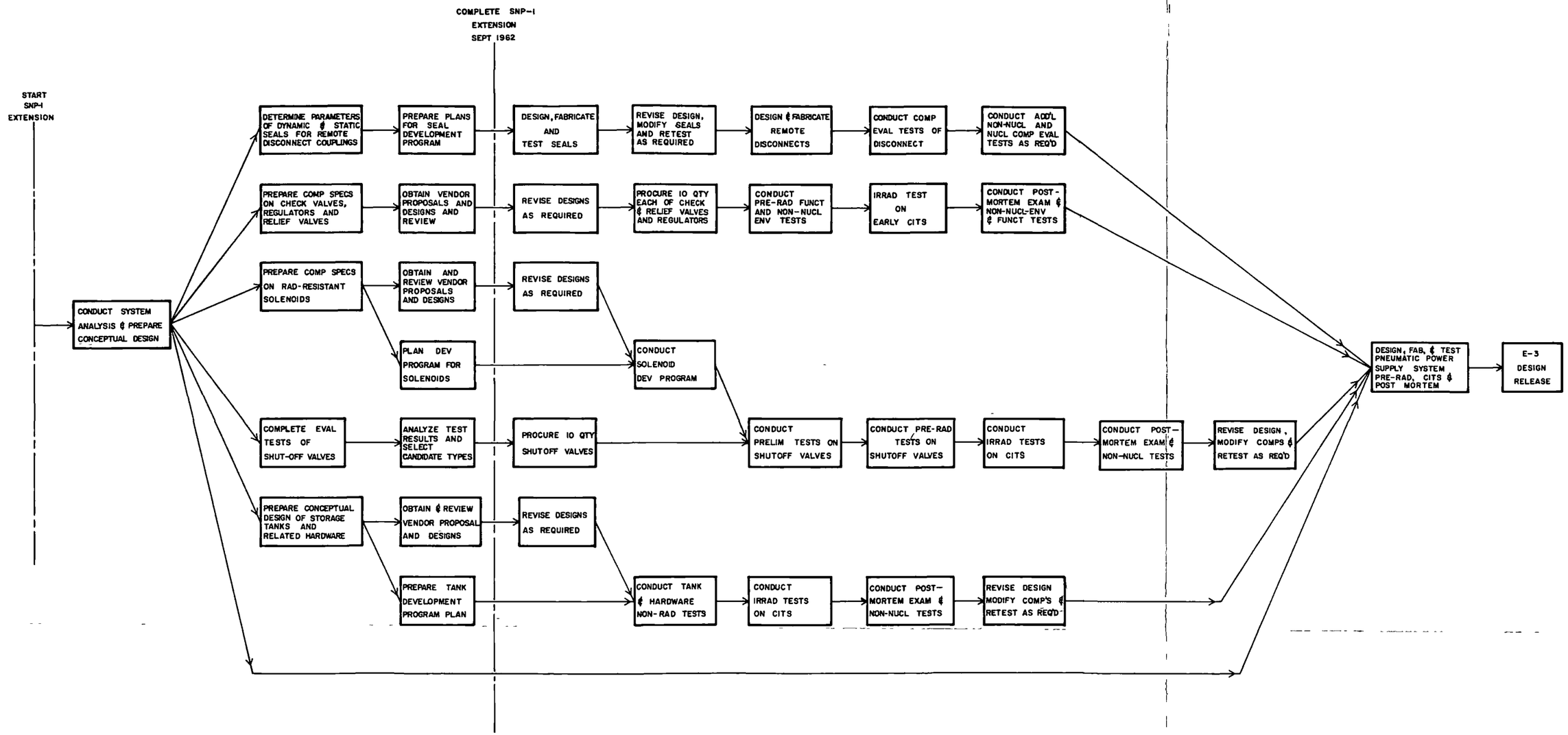

PROGRAM PLANNING NETWORK
SUB-TASK 1.7
PNEUMATIC POWER SUPPLY SYSTEM

Fig. IV-B-7-4, Vol. I

CONFIDENTIAL

NERVA PROGRAM

NERVA
Program Schedules
and
Milestones
11 January 1962 Through 1963

PNEUMATIC SUPPLY SYST.

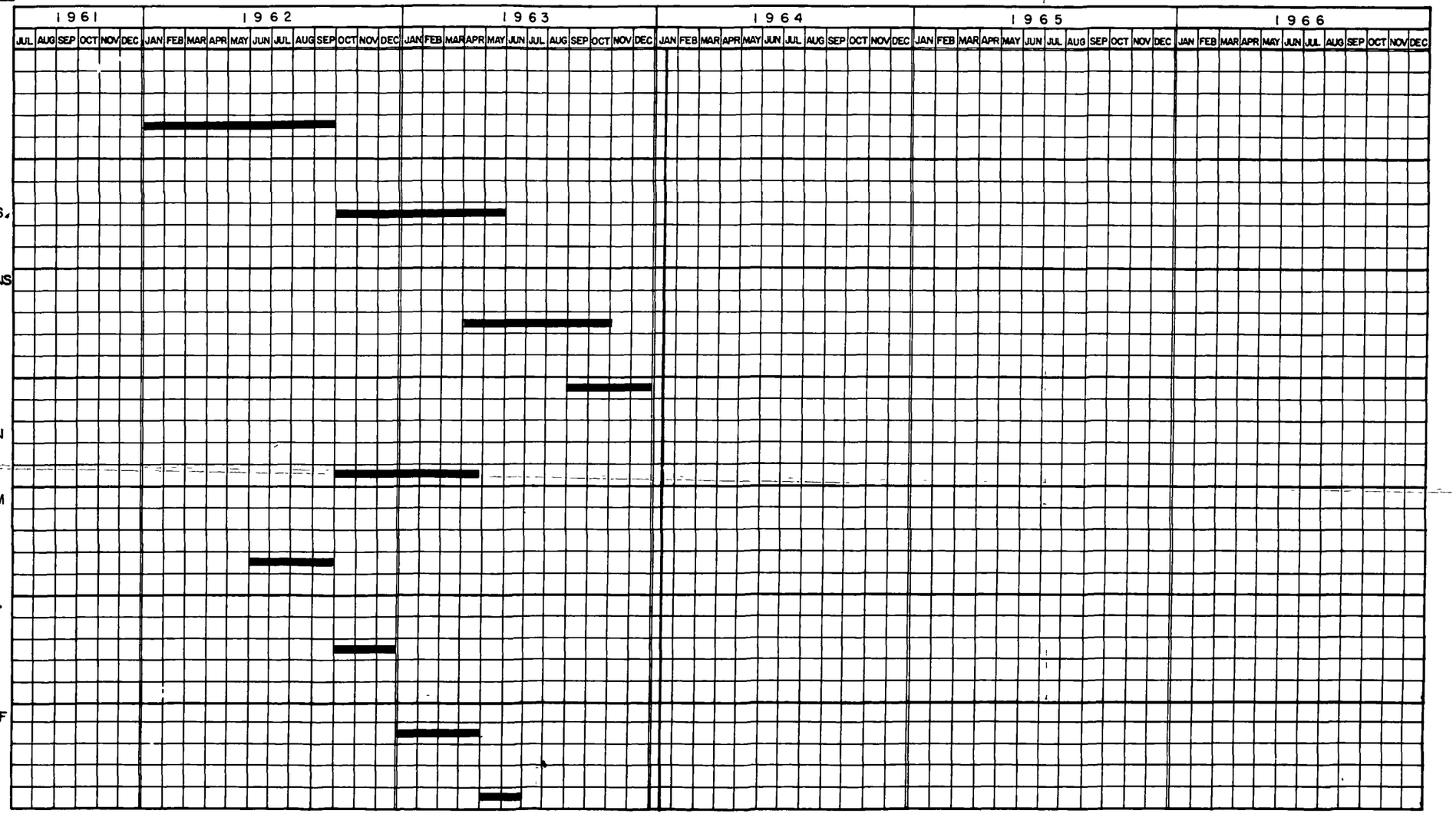

DESIGN STUDY OF METAL DYNAMIC & STATIC SEALS FOR QUICK DISCONNECT COUPLINGS.

INITIATE AND COMPLETE SEAL DEVELOPMENT PROGRAM OF METAL DYNAMIC AND STATIC SEALS.

PROCURE (10) DISCONNECTS START AND COMPLETE QUALIFICATIONS TESTING OF QUICK DISCONNECT COUPLINGS.

PROCURE (15) DISCONNECTS FOR E-1 ENGINE TEST.

START AND COMPLETE DEVELOPMENT PROGRAM ON RADIATION RESISTANT SOLENOID.

REQUEST PROPOSALS FROM VENDORS FOR CHECK VALVES, REGULATORS & RELIEF VALVES.

REVIEW DESIGNS FROM VENDORS ON CHECK VALVES, REGULATORS, AND RELIEF VALVES.

PROCURE (10) ITEMS EACH OF REGULATORS, CHECK VALVES AND RELIEF VALVES.

START AND COMPLETE PRELIMINARY TESTS ON THE CHECK VALVES, AND REGULATORS & RELIEF VALVES.

Fig. IV-B-7-5 (Sheet 1), Vol. I

NERVA PROGRAM

NERVA
Program Schedules
and
Milestones
11 January 1962 Through 1963

PNEUMATIC SUPPLY SYST.

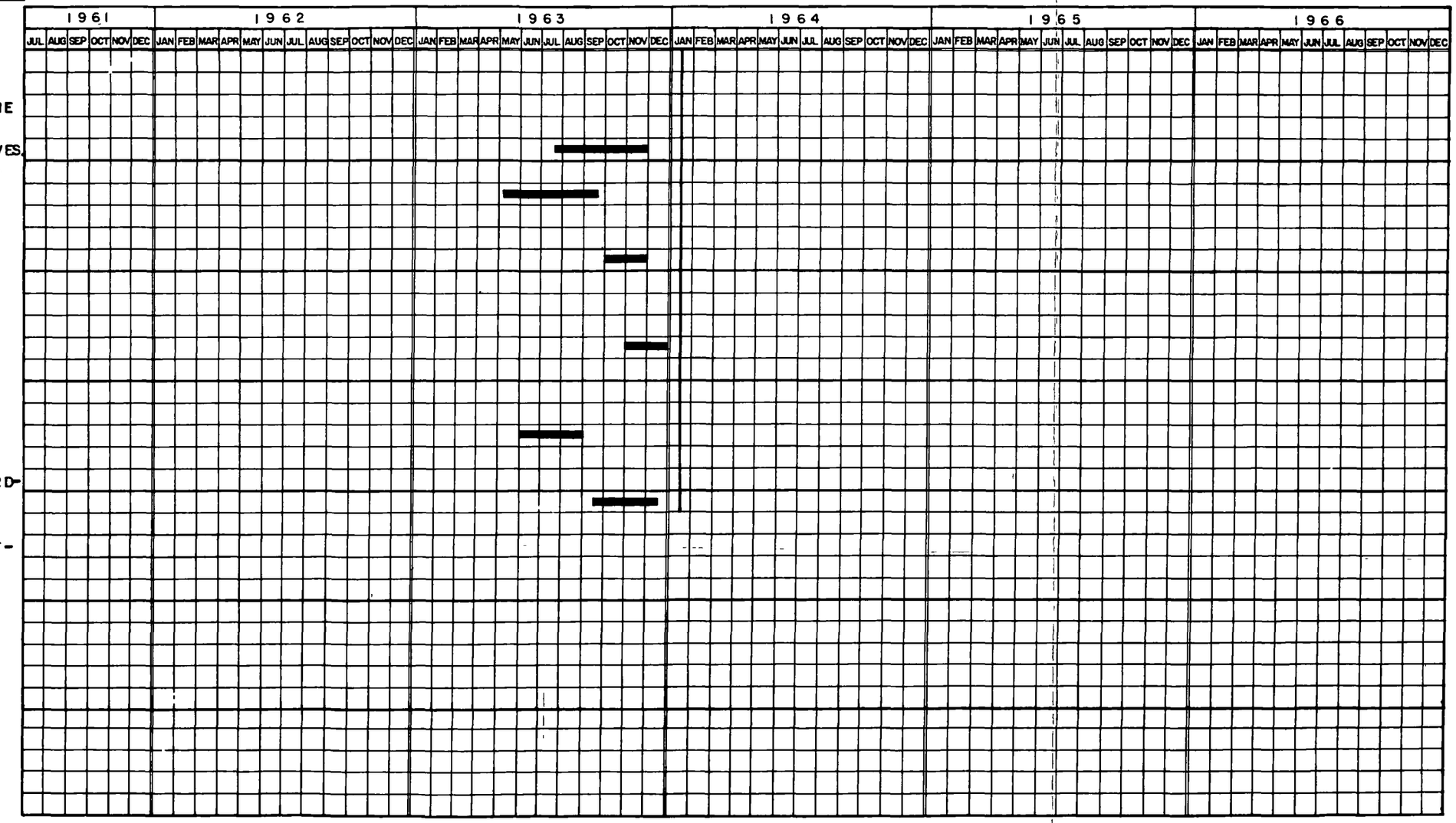

Fig. IV-B-7-5 (Sheet 2), Vol. I

8. Pressurization System

The major immediate effort of this task will be expended in analysis of requirements for the propellant pressurization system, which should be completed by 30 June 1962. The design of the components must be completed by 30 September 1962 to ensure that adequate time is available for the fabrication, development, and proof of the components prior to the required use dates.

a. Status of Phase I Effort

Analysis of the pressurization system for the NERVA engine was initiated during Phase I of the program It includes

(1) Establishment of the sequence of operations for the pressurization during three cycles of engine operation

(2) An estimate of time vs propellant volume, tank volume, and tank ullage volume, for an assumed mission equivalent to 10 min of full-power engine operation

(3) An analysis of experimental LH_2 tests, and the estimated environmental condition of the NERVA engine to determine pressurant flow rates

(4) Initiation of complete analysis of a pressurization system of the heated-bleed cycle with tapping from the reactor inlet.

b. Development Tasks

Several problems remain to be solved before an optimum design of the propellant pressurization system can be achieved, based on providing an adequate NPSP to the pump under all conditions of operation. These problems are discussed in connection with the propellant feed system in Section IV, B, 2, foregoing.

(1) Propellant Pressurization During Restart

The pressurizing gas is supplied from the plenum of the engine, hence, the propellant-pressurization requirement during restart

represents a major problem area, principally for the last restart, because the propellant tank will have a large ullage volume to be pressurized. This may force some compromise between the low-NPSP startup requirement and the use of an external gas-storage system in addition to the gas supplied by discharge from the control-rod actuators.

Coordination will be required with regard to the high-pressure gas-storage supply, the discharge gas of the control-rod actuators, and the propellant-pressurization system to achieve the optimum conditions for the pump at the startup.

(2) Varying Demands for Hydrogen

The varying demands of the propellant pressurization system for hydrogen gas from the plenum present another area of concern in the effects of this variation upon other using components or systems.

Even when the demands of the pump are constant, the pressurant-gas flow may vary considerably. The effects causing the varying demand are pressurization collapse, aerodynamic and radiation heating, and heat transfer between the tank walls or the liquid hydrogen and the pressurant. Pressurization collapse is the liquefying of the gas caused by the cooling of the particles close to the liquid-gas interface. Sloshing increases the area of the interface to such an extent that an appreciable quantity of gas is suddenly liquefied, thus drastically reducing its volume and radically reducing the pressure ("pressure collapse"). As the pressure collapses, there will be a sudden demand for an increase in gas flow to fill the space. This problem can be approached by using analyses based on previous experience with the pressurized discharge of LH_2 from tanks, and other data dealing with the problem of cryogenic-liquid discharge from large tanks. However, it will be necessary to test the actual tank for pressurization collapse to verify the calculations of the collapse factor.

(3) Aerodynamic Heating

During liftoff and during the boost phase, a certain amount of aerodynamic heating will be caused by the high velocity of the vehicle through the atmosphere. The heat transferred to the hydrogen may cause an increase in pressure by boiloff of the liquid and by an increase in the temperature of the gas, decreasing the need for pressurant-gas flow.

After reactor startup there will be a measurable amount of heating due to radiation from the reactor, which will also reduce the demand for pressurant gas.

IV Technical Discussion, B (cont.)

(4) Heat Transfer

Another effect causing a variation in demand for pressurant is the heat transfer between tank walls and the pressurant, and between the pressurant and the liquid at the liquid-gas interface, which in general increases the demand for pressurant gas.

It will be necessary to carefully analyze the above problems as well as those connected with the pressurization requirements for the structural integrity of the tank to establish the design criteria of the components for the propellant pressurization system. This analysis will be completed by 30 June 1962.

c. Component Development

Because the pressurization system consists of several components (pressure regulator, relief and propellant conditioning valve, remote disconnect, and flex line) the development of the pressurization system consists of essentially the development of the components and the blending of each into the system.

The problem of propellant pressurization will therefore be solved in steps, i.e., as each component is accepted for installation on the engine, that part of the system will be resolved.

The development of the components will take similar paths, i.e., several types of each component will be designed, fabricated, functionally tested, and tested in a non-radiation environment, for operation at conditions more severe than those expected under actual operating conditions, to ensure a margin of safety. After satisfactory operation under the above conditions, the component will be tested in the CITS installation to ensure its operation in a radiation environment. The component will be functionally tested after irradiation, and the results will be compared with results of the functional tests made just before irradiation. This comparison will provide the basis for selection of the particular component to be modified according to the requirements established by the mission and other criteria (which will be firmed by that time).

After modifications, the components will be tested functionally in a non-radiation environment, and will be retested functionally in a radiation environment, they will then be ready for integration into the system.

IV Technical Discussion, B (cont.)

(1) Regulator

The accuracy requirements indicate that a loaded dome-type regulator will be necessary, the major associated problem will be the sealing of the hydrogen gas. The detail design of this component will be completed by 1 October 1962, allowing 6 months each for fabrication and for testing (functional, modification retesting, environmental, and vibration), the regulator should be ready for irradiation tests by November 1963. On the basis of post-mortem data, the most successful candidate will be selected, it will be retested functionally, vibrationally, and environmentally, and will then be irradiated. After the post-mortem, the regulator will be available for installation in an engine by December 1964.

(2) Quick-Disconnect Coupling

The quick disconnect will probably be a small version of the one to be used in the propellant-feed system. Therefore, this development will be closely coordinated with and will be largely an outgrowth of the development of that component.

(3) Relief and Conditioning Valve

The multilevel relief and propellant-conditioning valve will present only relatively straightforward design problems, except that a sealing problem may arise. This valve will be designed by October 1962; with 5 months for fabrication, and 4 months for functional and non-nuclear tests and modifications, it should be available for irradiation tests by August 1963. As finally developed, it should be ready for installation in the engine by May 1964.

(4) Flex Line

The problem of providing a flex line for crossing the gimbal point is expected to be solved in a manner similar to that employed by Aerojet in its Ablestar program, there, an elbow was used with a restrained bellows on each leg. Experience shows that this construction has the same strength and more flexibility than a straight section with a bellows in the line. The design and fabrication work will be straightforward after the line is sized; with 2 months for fabrication and 1 month for testing, the part should be available for installation on the E-3 engine.

Each component will be installed in the system as it is accepted. The propellant-pressurization system should be integrated by October 1964.

d. Critical Problem Areas

Because the tank pressurizing requirements for the first engine tests can be satisfied by the pressurizing system on the test stand, the development of this system, or its components, is not critical. During the period from January through September 1962, analysis and design work only will be performed, and the development work will be started after October 1962. Detailed mileposts for the 9-month program are shown in Technical Administration Document 1.8 in Volume II. A program planning network is shown in Figure IV-B-8-1, and milestones are shown in Figure IV-B-8-2.

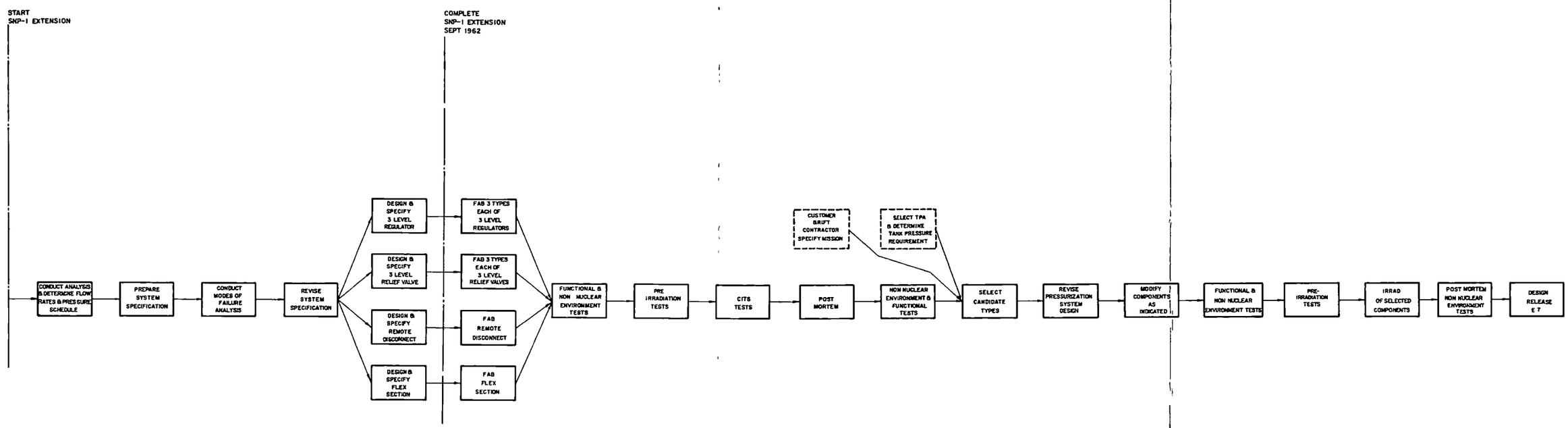

PROGRAM PLANNING NETWORK
SUB-TASK I 8
TANK PRESSURIZATION SYSTEM

Fig. IV-B-8-1, Vol. I

NERVA PROGRAM

TASK ITEM 1.8
PRESSURIZATION

NERVA
Program Schedules
and
Milestones
11 January 1962 Through 1963

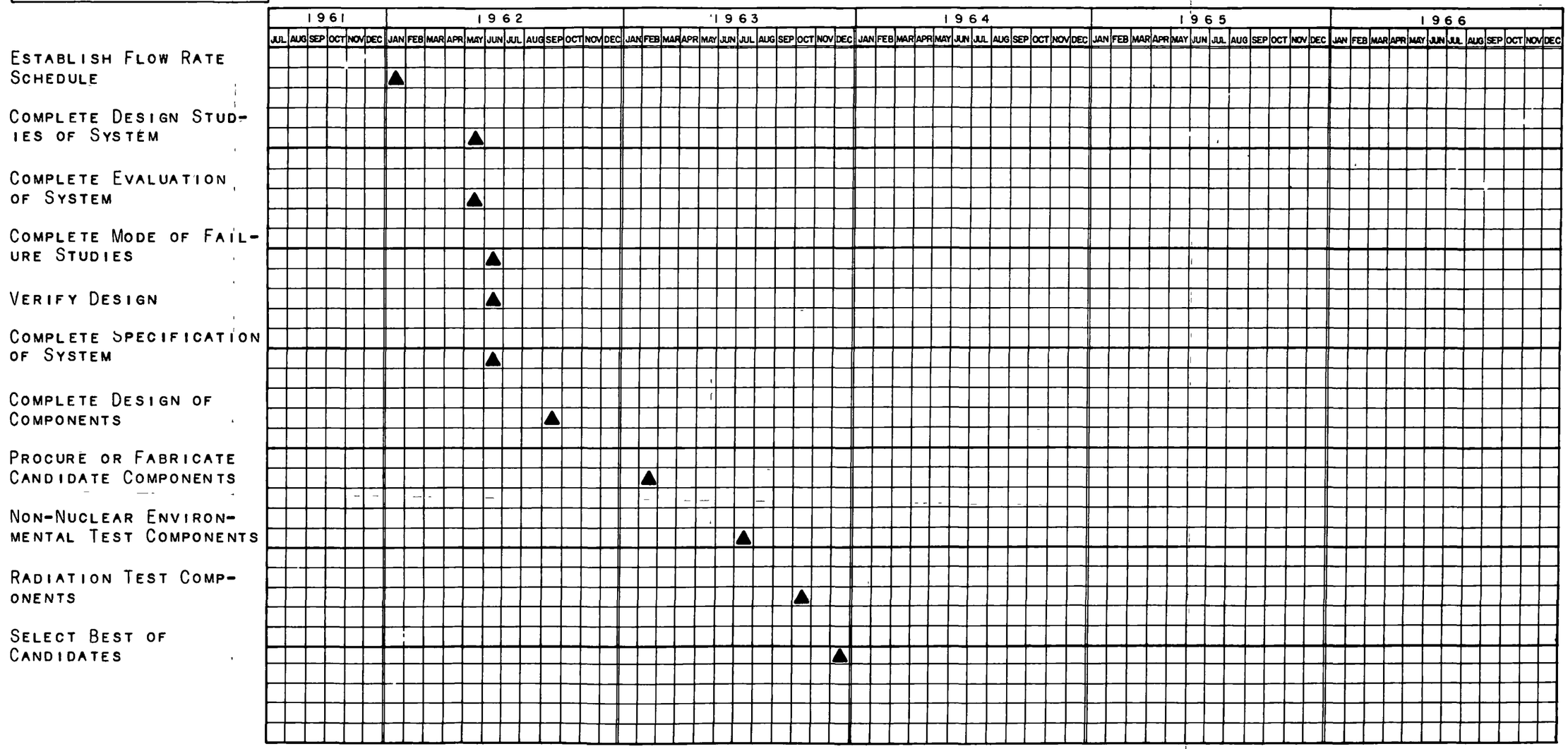

Fig. IV-B-8-2, Vol. I

9. Component-Irradiation Test System (CITS)

Radiation testing for the development of the NERVA engine requirements might utilize several different sources of radiation in attempting to match the environmental conditions of the NERVA engine. These sources might include electrical ionizing-radiation sources, test reactors such as the MTR and Plum Brook facilities, or side-by-side tests using the Kiwi-B reactor during development test series. All of these radiation sources have advantages but none of them allow an ideal combined simulation of the required nuclear, thermal, and mechanical environments. Ionizing radiation sources can be combined with the hydrogen atmosphere for some types of experimental objectives. In-pile loops may be created with neutron and cryogenic environment simulation, but space limitation and hydrogen safety aspects limit the desirable features. Side-by-side testing would appear to be ideal except for the limitation of the restricted number of test setups available, a result of the fact that only a few 300-sec test runs will be available during the next two years. It therefore appears that a radiation test facility specially designed for the NERVA engine development objectives is required.

a. Description

The Component Irradiation Test System, CITS, will be a reactor suitable for producing the radiation environment needed for testing NERVA engine materials, components and systems. It is presently envisioned as an installation to be made within the ETS-1 facility. The CITS facility, discussed further in Section IV, D, 6 of this volume, is to be capable of producing the test conditions for NERVA engine components with as close a simulation as possible of the NERVA radiation environment. Further, it is to be so designed and operated that exposure time can be significantly increased over that of the specified engine lifetime. The reactor for CITS will be based on Kiwi-B technology, but will be operated at reduced power and temperature, to insure a maintenance-free lifetime compatible with the CITS testing program.

The critical components of CITS are the reactor and the associated coolant and control systems, and the design and fabrication of the test systems, including the instrumentation and hardware required to obtain the desired experimental information.

b. Use

Primarily, CITS will be designed for radiation testing of NERVA engine components and assemblies which have been previously proven in non-radiation environment tests, but should also have the capability of supporting some testing of materials and developmental components.

Continuing use of the system beyond the immediate requirements of the NERVA engine might be considered. Advanced materials radiation testing, follow-on engine component checkout, and engine-vehicle tank integration experiments should all be anticipated. The immediate program will be devoted to planning and design of the CITS for one year of operation, June 1963 to June 1964, but continued use will be considered during the design study phase.

c. Development

Existing Kiwi design and material development information will be utilized to the maximum extent possible to minimize the development required, thus permitting early release of the CITS reactor for fabrication. Features which may be incorporated include the capability of operation while using either nitrogen or hydrogen. Controls will be standard, reliable hydraulic actuators, well-shielded below the reactor assembly. Coolant flow will be introduced from below the assembly and will also exit at the base. The entire reactor assembly, where possible, will be plumbed, instrumented, and controlled from below, to leave a maximum usable space above the reactor for CITS service.

d. Testing Capability

Another major aspect of this task item concerns the planning of experiments to be conducted at the facility, and the organization of individual setups for the test runs. Experiments to be conducted will be integrated into an assembly, referred to as a Test System, with an Engine Installation Vehicle (EIV). Independent experiments, such as bearing testers, electrical-system components, materials testing arrangements, etc., will be integrated into each experimental plan, and Test System to allow optimum utilization of the facility. Eventually, a complete Engine Test System will be included as a radiation test item. Figure IV-B-9-1 illustrates such a test set-up, together with the lower portion of a vehicle tank configuration.

An additional, and important, capability of the CITS facility will be a tank-heating experiment, which presents a good approximation to a vehicle configuration. Within the CITS enclosure shield there will be about 20 feet of clear height between the reactor and the permanent thrust structure. Figure IV-B-9-2 illustrates a tank heating experiment which, though not an ideal simulation, is amenable to analysis by virture of its simplified geometry. Neutron and gamma dosimeters can be arranged to provide an accurate picture of the radiation environment for comparison with analysis results. Heating and internal convection currents can be measured

in this setup, and the data correlated with an analytical model, thus providing a basis for actual vehicle analysis. Liquid hydrogen flow from the experiment tank can be arranged as a variable parameter to further cover the scaling factors involved in such a setup.

e. Scheduling Requirements

The CITS facility is scheduled to be available for operation in June 1963. Allowing 9 months for procurement and checkout, the assembly design of the CITS reactor must be complete in September 1962. On this basis, the conceptual design and operating requirements must be established very early in the program to allow sufficient time for detailed design. It is planned that the first 3 months of effort will be devoted to clarifying the CITS design goals and arriving at a design freeze so that engineering may proceed after March 1962. Engineering design drawings and a CITS reactor design report can be completed during the following 6 months, thus allowing fabrication to be initiated by October 1962.

Since comprehensive testing of engine components and subsystems is required in non-radiation environments prior to these tests being conducted in the CITS facility, these test programs must be planned and scheduled during the first 6 months of the program. This scheduling is further justified by the need for establishing test specifications in support of the CITS reactor design goals and the facility modification requirements (Reference, Task Item 3. 6). Preliminary experiment plans will be made and designs of the test systems will be prepared concurrently with the reactor preliminary design by the end of March 1962. As the reactor engineering design proceeds, these test systems will be established in greater detail thus guiding the engine component development engineering compatibly with CITS radiation test requirements. Close coordination will be maintained with the reliability and quality control functions, so that full productivity and usefulness of test data will be possible.

Operations analyses will be conducted in the third quarter of 1962 as refined details of the reactor and test systems will become available. This will allow a realistic transition into the program phase which will require ETS-1 modification, fabrication, and installation of CITS equipment, safe sufficient operation of the facility during checkout, and continuing use of the CITS facility in 1963 and 1964. A program planning network is shown in Figure IV-B-9-3 and a milestone chart is presented in Figure III-A-7.

ENGINE TEST SETUP
IN CITS FACILITY

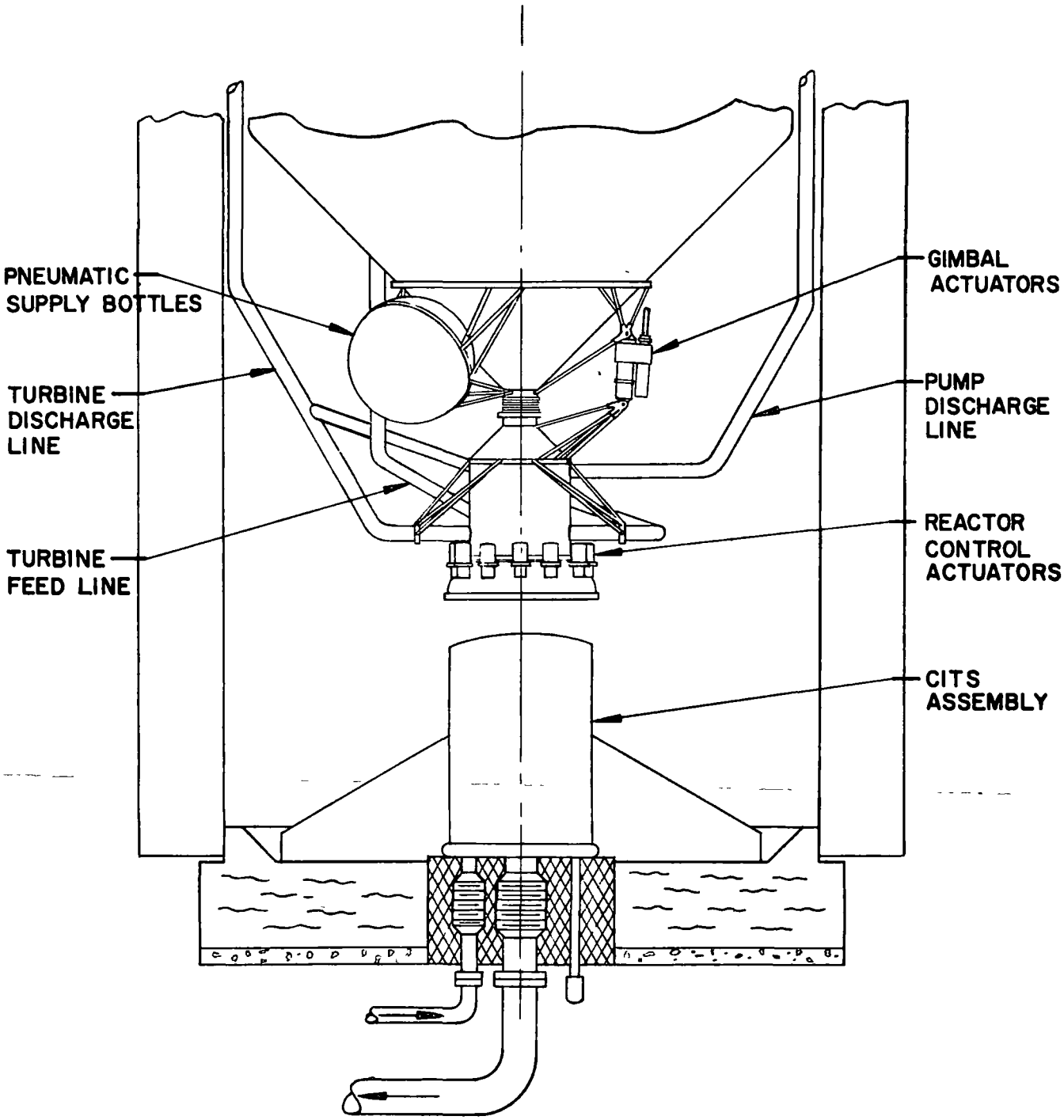

Fig. IV-B-9-1, Vol. I

TANK HEATING EXPERIMENT
IN CITS FACILITY

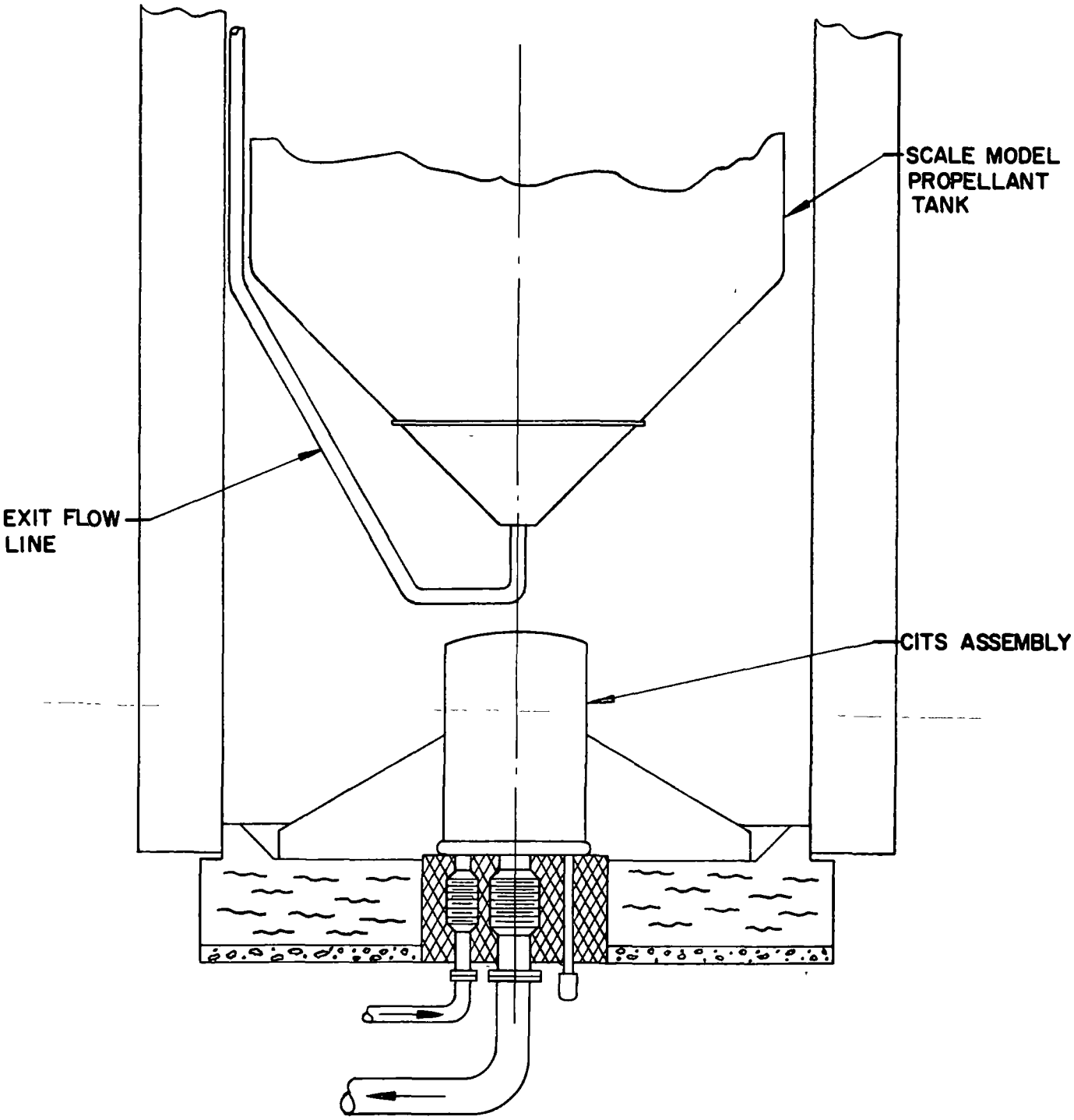

Fig. IV-B-9-2, Vol. I

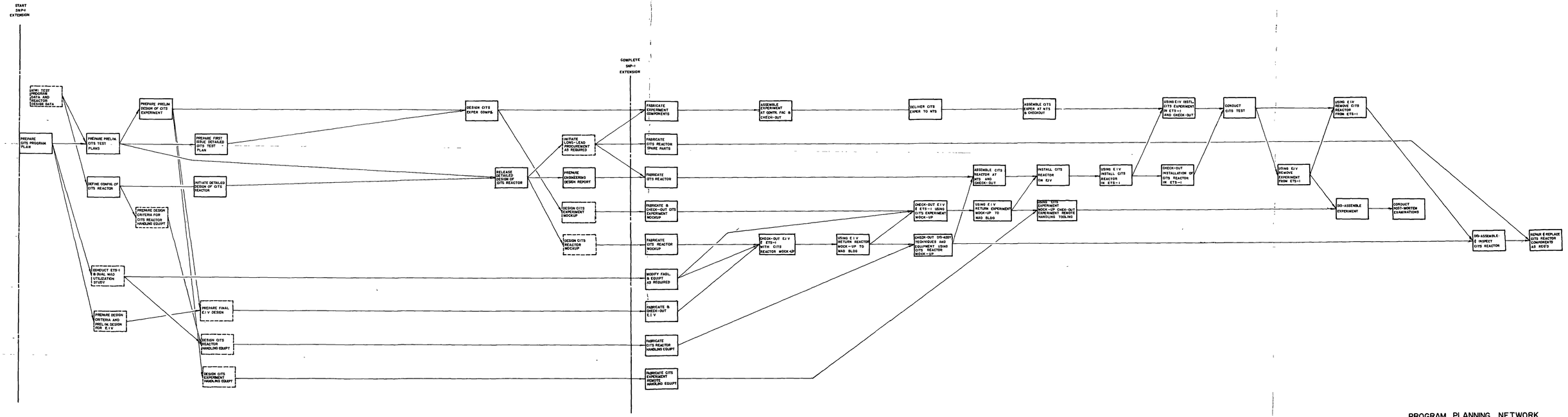

PROGRAM PLANNING NETWORK
SUB-TASK 1.9
CITS

Fig. IV-B-9-3, Vol. I

IV Technical Discussion (cont.)

C. ENGINE SUPPORT SYSTEMS

1. Support-Equipment System

a. General Considerations

The purpose of this section is to present the engineering approach and general philosophy which will be utilized in the development of an effective GSE system for the NERVA engine in all operating areas. The engineering approach, shown schematically in Figure IV-C-1-1, is a straightforward approach which has been used successfully in other major rocket engine programs. A thorough system analysis of functions such as engine test plan, propulsion system requirements, the engine maintenance plan, the engine operations and flow plan (see Figure IV-C-1-2), and the facility interface requirements will become the basis for the formulation of the GSE system program plan. This plan will present, in a chronological sequence, a brief functional analysis of events that must occur in each operating area, and will depict our concept and analysis of NERVA engine functions that will require specific items of support equipment. This plan will establish and schedule development of equipment and its delivery to the proper location at the proper time, for adequate support of the NERVA CITS, NRX, and E-engine.

The nature of support equipment is such that its design cannot be completely established until the design criteria imposed by the engine and its supporting facilities are firm. In addition, the equipment must be delivered before the delivery of the engine system to meet the engine functional requirements. This design dependence characteristic requires, in the interest of schedule maintenance, that all support system designs be of such a nature that they are readily adaptable to engine and facility changes, and that they will permit design to proceed as independently as possible of engine or facility interface program sequence. Consequently, the support equipment to be developed will be composed of adaptive-type equipment which can be upgraded to meet the eventual operational requirement of the engine with a proven and reliable system. In addition, maximum utilization of available commercial equipment will be made in order to expedite maintenance and promote support equipment system standardization and reliability wherever possible. This philosophy of design is particularly applicable to the CITS requirements of the NERVA program.

Because of the nuclear aspect of NERVA it will be necessary for the engine designers to incorporate certain unique design features, without which remote checkout or handling could not otherwise be accomplished. Constant feedback of crucial support equipment requirements to the engine designers will be necessary throughout the program.

As a summation, the following will be the more important objectives of the GSE system program plan.

(1) It will permit early planning for the identification of all support equipment functions to be accomplished, and it will take into account the resultant effects on the NERVA engine system design

(2) It will finalize, well in advance of the delivery date of the support equipment, all information and techniques needed for maintenance and operational handbooks.

(3) It will optimize the compatibility and maintainability of the support equipment within itself, with the NERVA engine system, and with the necessary facilities.

(4) It will provide the basis for recommending the development of new items of equipment, for modification of existing items of equipment, for the use of commercially available items of equipment.

It should be emphasized that the introduction of radiation hazards constitute a fundamental difference between past rocket-engine support systems and the NERVA support system. The nuclear aspect of the NERVA engine requires remote handling, assembly, and disassembly equipment which represents a paramount problem in this support system. This area is discussed in paragraph IV,C,b "Remote Handling Systems." Paragraphs IV,C,c and d will discuss "Checkout and Test Systems," and "Transport, Handling, and Maintenance Systems." In each area, a definitive summary of the major problems will be presented. This summary will be followed in each case by an equipment development program to properly support the NERVA engine system.

b. Remote Handling Systems

(1) Statement of Problems

(a) The establishment of the remote handling equipment and tooling required for assembly or disassembly of the NRX, CITS, and NERVA E-engine systems, subsystems, and components, at NNRDC.

(b) Determination of the remotely operated transport systems and supporting equipment required to transport the CITS reactor or experiment, the NRX reactor system, and the E-engine from the MAD and E-MAD buildings to the test-stand complex, graveyard, or hot-storage area.

IV Technical Discussion, C (cont.)

(c) Performance of the basic requirements of delivery, recovery, and emergency operations, as well as the upgrading of this equipment as required for operational use at AMR.

(d) Development of the NERVA engine support systems required to be used in the RIFT ground-test program.

(2) Major Phases

The NERVA program encompasses three major phases: the NRX tests, the CITS experiments, and the E-engine development.

During the NRX program, the problem of remote handling will utilize, to the extent practicable, the Kiwi-B type remote handling systems. Study and evaluation of the LASL/ACFI equipment and procedures will be completed, and equipment modification and the necessary procedures will be developed. Where the LASL equipment is unacceptable to the program schedule, additional equipment will be provided.

The CITS experiment involves engine components and subassemblies testing for evaluation in the actual radiation environment. This program will entail analysis of the experimental program to determine the CITS and CITS experiments remote-handling equipment requirements, and the development of criteria to generate specifications and initiate design, review, and approval procurement, checkout, and installation of such equipment into an integrated program encompassing the present MAD and new E-MAD facilities.

The task of remote handling for the E-engine will continue, based on the philosophy that the engine will be delivered to NNRDC as a complete unit minus the core. The core will initially be shipped as components and assemblies, but eventually may be shipped as a complete core. Maintenance of the engine by replacement of various subassemblies to achieve the maximum test capability for the unit will be considered, and will be a determining requirement of the remote-handling support system.

Solutions to the problems of remote handling will be initiated with detailed study and analysis of the hardware and engine assemblies, schedule requirements, and the objectives defined by the engine program, and will be culminated by the development of remote-handling criteria, requirements, definitions, and identification of equipment. These will be followed by development of detailed designs, functional and operational specifications, fabrication, procurement, assembly, and checkout of the items in actual use.

(3) Engine-Design Evaluation

The program of remote handling will basically start with the evaluation of the NERVA engine design, to insure that the engine can be remotely assembled or disassembled in a practical manner. The evaluation will be a continuous review of the engine drawings, utilizing coordination and liaison between NERVA and the subcontractors and sufficient information feedback to permit incorporation of remote-handling features into the engine design. The analysis will consider the type of manipulator to be used, the type of tooling required, special tool designs, the steps of the remote operations involved, the methods of indexing, and fixture placement. The engine evaluation will identify the type, amount, and size of the tooling and equipment. During the study period, facility and transportation items, such as the bridge crane, side-wall manipulators, O-man manipulator, shielded viewing windows, engine installation vehicle, prime mover, and the remotely-controlled bulldozer, will be integrated into the system study to determine their effect.

The study and development of remote handling as related to the engine will be intimately involved with E-MAD building facilities, requiring adaptation of the tooling and equipment for usage in conjunction with the facilities installed equipment. It will require the development of floor-plan arrangements showing the operational locations, movements, and usage of each piece of remote-handling equipment throughout the assembly, disassembly, and maintenance of the engine. Procedure manuals will be developed showing the overall operational procedure to assemble or disassemble an engine. These manuals will be the direct result of the continuous engine-design evaluations, and must be constantly upgraded as design changes are made.

Supporting documents will be required for the actual remote operations within the E-MAD building, at the test stand, and for all major functions involving the engine. These documents will be functional specifications showing the step-by-step operations, and will require the study of the E-MAD floor plan, engine design, assembly/disassembly, post-mortem operations, storage, accountability, disposal, and transportation.

Evaluation of the engine must concern itself with the test-stand complex, and the effect of the test-stand design upon the engine-test stand interface. From these studies, the effects of modification and augmentation of the test stand, engine-installation vehicle, and any other remote-handling items must be fed back into the program for consideration.

(4) Engine-Transport Systems

These systems will be concerned with the movement of the engine between the E-MAD and the test stand, supporting facilities, graveyard, and hot-storage areas. These operations embody delivery, recovery, emergencies, and disposal.

To initiate the designs of the equipment required for transportation, it will be necessary to perform an analysis of the methods of control, such as TV, radio, and electrical. Shielding requirements for controls and personnel must be established, materials selected, and operational time limits considered.

Specific equipment, such as the engine-installation vehicle and the all-purpose vehicle, will require the determination of requirements pertaining to operating temperature, stability, carrying capacity, envelope, and vertical and rotational flexibility to permit interfacing and connection with the test stand and E-MAD assembly stands. Methods of positive indexing and control, shock and vibration requirements, and safety systems and braking methods must be resolved.

Each of the items required to remotely transport the engine, engine subsystems, waste, and stored items, involve a study of the E-MAD building, test-stand complex, graveyard, and other support facilities, to determine probable modifications and augmentations to the equipment designs.

Remote-handling equipment, such as the prime mover, bulldozer, Beetle, crane, and dump cars, although considered GFE, require the development of basic criteria to be supplied to SNPO to insure their compatibility with the NERVA engine operations at NNRDC.

(5) Engine Assembly, Disassembly, and Post-Mortem

(a) Assembly and Disassembly Equipment Required for Operations to the Subsystem Level

This hot-bay equipment embodies, in conjunction with the facility-installed equipment (such as the bridge crane, turntables, O-man and side-wall manipulators), specialized tools, jigs, and equipment. Some of the equipment and fixtures proposed are shown in Figure IV-C-1-3.

The equipment required to perform these operations must be capable of movement in three axes, and be able to rotate the piece. This equipment must be operated remotely through shielded glass windows, sometimes aided by binoculars and TV, with movements controlled by portable control consoles placed in an operating area external to the equipment location.

The major assembly, disassembly, and/or maintenance stands shown in Figure IV-C-1-3, require basic design specifications to be developed after the review of the various concepts being currently developed. These concepts may vary between the simplest jigs and fixtures, to the more elaborate push-button systems. Review of these concepts will be made to develop specifications that will combine the benefits of simplicity, automatic control, operational reliability, and a minimum of operator fatigue.

Specifications will be developed to include operating requirements such as control limitations, shieldings, rotation, raising and lowering capability, stability, maintenance, materials, loads, mobility, interfacing with other equipment, and consideration of human engineering factors.

Analysis of cold-assembly tooling, jigs, and fixtures will be performed to utilize the equipment for emergency remote operations. Modifications and augmentation of the cold-assembly equipment will be made, where compatibility requires, for use with manipulators, crane, and assembly stands.

Evaluation of the mobility and operational features of the jigs and fixtures must be made to determine the method of powering, positioning, indexing, and transferring of stands and/or the engine. Each piece of equipment will be reviewed to determine the effect it has upon the operating procedures and engine design compatibility, and to insure rapid and reliable assembly and/or disassembly.

(b) Engine Subsystem and Component Disassembly Equipment

The equipment described in this section is required in conjunction with the facility equipment which is necessary to assemble/disassemble the engine subsystems and components. In conjunction with the facilities-installed equipment and control systems (such as shielded

windows, sidewall and GM-150 or 300 manipulators, slave manipulators, periscopes, mobile tables, fixtures, stands, racks, model trains, dollies, conveyors), highly specialized tooling, jigs, fixtures, and stands are required that are unique to each subsystem or component disassembly.

These pieces of equipment embody the problems of disassembly tooling interface with manipulation and service equipment, and include such fixtures as grippers, slings, remote dollies, subsystem and component disassembly stands, remote tool sets, and graphite reflector stands, as noted on the diagram of functional operations and associated equipment locations (Figure IV-C-1-4). This equipment requires the same degree of mobility and reliability, but a larger number of axial motions, as does the system disassembly equipment.

The equipment required for these operations will be resolved during the engine-design evaluation, and a detailed study will be made of the disassembly of each subsystem, component, and subassembly into its detailed parts. Each fixture must present the assembly to the operator's view by techniques such as rotation, turning, and locking into fixed positions, so that various manipulator grips or tools can remotely disassemble the item in the hot-bay or disassembly cell areas noted on the E-MAD floor-plan arrangement Figure IV-C-1-3.

Checkout of the engine or core item instrumentation or controls may be required during any phase of disassembly, thereby imposing further requirements on the fixture capabilities. Operational time limits will be studied, and modifications or augmentations of the equipment to upgrade its capabilities will be accomplished, as required by engine-design changes.

The development of design specifications encompassing operating requirements pertaining to shielding, positioning, operation of the item, rotation, maintenance, human factors, materials, and interfacing must be accomplished.

(c) Special Tooling for Post-Mortem Operations and Analysis

Post-mortem operations will require facilities equipment, such as the GM 150 or 300 manipulators, master slave manipulators, tensile testers, X-ray, and polishing equipment. In conjunction with this, the appropriate specialized equipment necessary to prepare specimens, to operate, inspect, and checkout the specified item or its instrumentation, prior to or during the specimen evaluation, will be required. These

operations may include gaging, instrumentation verification, metallography, chemical analysis, X-ray, dimensional and visual inspection, and torque and deflection measurement of both core and engine parts.

Review and analysis of the engine development and test programs will delineate the equipment required, the specific operations to be performed, and the data to be acquired from the post-mortem. Criteria generated during this analysis will be developed into design specifications to permit acquisition of the special tooling.

Procedures and functional specifications will be developed to permit proper utilization of such equipment during post-mortem operations.

This equipment will be required to operate with facilities-supplied equipment and utilities (such as air, gas, cutting equipment, torches, X-ray, grinders, and polishers), and must be capable of extremely fine degrees of operation when supported by these facility items and master slave or overhead manipulators. The motions and operations of this equipment are often precise and complex to accomplish a single post-mortem operation.

(d) Facility-Interface, Remotely-Operated Equipment

The interface equipment may be considered in more than one category of remote handling, and may include such items as the test-stand deflector-duct inspection equipment, special gages, remote checkout systems, and test-cell interface adapters, with quick disconnects, plug-ins, and locking devices.

Some of the interfaces involved are: the test stand-to-interface adapter, vehicle-to-engine interface, engine installation vehicle-to-test stand, engine installation vehicle-to-E-MAD and E-MAD assembly stands.

This type of equipment may require the use of transportation-system equipment to move about or operate, such as the prime mover, and, in emergencies, the Beetle could be used.

Each of the interfaces must be analyzed, and criteria must be established to permit the design of the facility interface remote equipment. Critical problems to be considered in the interfacing of facility and remote-handling equipment are adequate remote-control and visual-inspection methods, methods of connection, alignment, indexing, and positioning.

In addition to the equipment listed above, many pieces of remotely-operated auxiliary equipment, such as an emergency shield system for use in the E-MAD, special storage vaults, cranes, special decontamination fixtures, and bulldozers, may be required to support the operations at the E-MAD, graveyard, hot-storage area, and decontamination area.

All of these interface studies must be coordinated throughout NERVA operations, subcontractors, facility contractors, and government agencies, to insure proper designs and operations. Specifications must be developed, and subassembly criteria must be established and integrated into the specifications.

Review of all related facilities, facilities installed, and supporting equipment, must be performed to insure proper interfacing of this equipment into the engine program.

Figure IV-C-1-5 shows a preliminary list of remote-handling equipment and the proposed schedule of GSE.

c. Checkout and Test Systems

This task has the purpose of establishing and developing the checkout and test-support equipment required for operational checkout of the NERVA NRX, CITS Program, and the E-engine systems, subsystems, and components at NNRDC, and upgrading this equipment for operational use at AMR.

(1) Procedure

The initiation of a program to implement the development of checkout and test equipment requires a series of concurrent investigations and analyses. The program will follow the engine's progression from the design phase through test and ultimate disposition (see Figure IV-C-1-2). The flow is a typical rocket engine flow, but complicated somewhat by NERVA's nuclear aspect:

(a) The engine and reactor manufacturers will design, fabricate, and test their products, and ship them to the test site.

(b) The engine and the reactor will each be relegated to the designated area in the MAD or E-MAD building for checkout prior to assembly.

(c) The engine and reactor will be assembled and submitted to final checkout before delivery to the test stand.

(d) At the test stand the engine will proceed through a countdown, to include final systems operational verification prior to firing.

(e) After test, the engine will be remotely removed from the stand and taken to the "hot" disassembly area in the MAD or E-MAD building.

(f) A postfire checkout may be performed, or disassembly or maintenance operations may begin.

(g) In either case, the engine subsystems are thoroughly checked out, and either removed for retest on another engine, disposed of as waste, or delivered for post-mortem evaluations.

(2) Program Plan

The GSE Program Plan will establish the functions to be checked and the location of each checkout operation. Subsystem verification is necessary prior to reactor and engine mating, so that possible malfunctions can be located early and minor repairs effected. Specific functional characteristics, particularly those of transducers, must also be determined and recorded. Complete reactor-engine checkout prior to delivery to the test stand will establish control-rod position at reactor low-power critical point, low-level power mapping, a complete system calibrate check, and a general full engine functional integrity check. Postfire and subassembly checks provide information on the effects of the test.

Equipment for checkout and test will be provided at the site in advance of the engine and reactor delivery by at least 30 days, so that it may be installed, checked out, and be available for the engine to maintain test schedules.

(3) E-Engines

Using the GSE System Program Plan as a program basis, preliminary definition and identity of the checkout and test-support equipment required to satisfy the support functions for the E-engine at the engine and reactor manufacturers' plants and NNRDC will be established. From

this, the initial design criteria and specifications will be developed to initiate the design and fabrication for all pieces of checkout and test-support equipment which are to be used for the NERVA E-engines. The criteria and specifications will cover equipment to be used at the engine and reactor manufacturers' plants and at NNRDC, and will be updated as required to cover larger engine designs, engine vehicle tests, and RIFT operational testing. Procurement of materials and components and the fabrication and test of required equipment for checkout and test utilization will follow a similar philosophy in satisfying NERVA support requirements. Continuous feedback loops will be provided to maintain a flow of information which will reflect current engine philosophy and requirements.

Operation and maintenance manuals will be provided with each piece of checkout and test equipment to reduce difficulty in training personnel, and to maintain the operability and reliability of the equipment.

The checkout and test-support equipment planning will be programmed in conjunction with remote-handling systems and transport ground handling and maintenance systems in the performance of a support system.

Investigations and studies, initiated during the original contract period, are progressing and will assist in establishing checkout and test needs during engine assembly, test operations, and disassembly; a preliminary list of the equipment, including a brief statement of function, is shown in Figure IV-C-1-6. The equipment which the engine manufacturer and the reactor manufacturer require to support their development and test phases at the plant sites are being investigated for possible application at NNRDC.

Two of the more important pieces of equipment, those which will receive considerable attention for modification and updating, are described in the following paragraphs:

(a) Final Checkout Trailer

This unit will be used for complete subsystems checkout of the engine at the MAD or E-MAD building prior to its transfer to the ETS for test. The unit will be mobile and, for these subsystems checkout operations, will be capable of being close-coupled to the test-stand mockups located in the cold assembly area or those located in the hot bay by means of interconnecting cables. In addition, the unit will be capable of being

remotely coupled to the test-stand mockups in the cold assembly area for the purpose of reactor control during critical experiments. The trailer will include the following pieces of equipment:

1 Transducer Calibration Checker

A device for checking the calibrate points on each transducer channel. A programmer will be required due to the vast number of channels being checked.

2 Gimbal and Roll-Nozzle Actuator Controller

Control mechanisms to actuate the gimbal and roll nozzle to verify operation and check calibration for control limits.

3 Pneumatic and Hydraulic System Controller-Checker

A device to control and check the mass flow of gaseous hydrogen or nitrogen through the engine and verify valve actions, turbopump performance, and pneumatic system performance in general.

4 Reactor Control Console

This console will control the reactor control-drum actuator drive mechanisms, read out drum position, and monitor neutron count from a BF counter located at the engine for the purpose of making the reactor critical and operative for short periods at low power levels as required for critical experiments and power mapping studies.

5 Data-Acquisition System and Analog Computer

This computer will receive, store, and reduce data for evaluation of the checkout runs.

6 Operations Sequencer

This unit will control the sequence of checkout events to correspond to the test-operations countdown.

In addition, signal conditioning equipment, power supplies, instrument racks and cables, and a cable trap will be required. Engine-function monitors will be necessary to simulate servo control capability.

(b) Transducer Functional Checker

It will be the purpose of this unit to check the function of each transducer installed on the engine assembly, and verify its range of function and calibration and its signal conditioning and readout system compatibility. This unit will be utilized in the cold assembly area during non-nuclear engine checkout. The unit will require automatic programming with manual-override to accomplish verification of the many channels required. In addition, an analog computer and display will provide recording of malfunctioning channels for evaluation and determination of repair possibilities or engine rejection. Figure IV-C-1-7 shows a preliminary list of checkout and test equipment and the schedule for this equipment.

d. Transport, Ground Handling, and Maintenance Systems

The problems associated with this task are the establishment of equipment required for the transport, handling, and maintenance during cold operations of the NRX, CITS, and NERVA E-engine systems, subsystems and components in all operating areas.

The design, development and utilization, of the transport, handling, and maintenance equipment is based on the concept that the engine contractor will design, fabricate, assemble, test, package, and ship a complete engine, less the reactor, to NNRDC, or as major subassemblies for replacement of damaged parts. The reactor contractor is to accomplish a similar effort except that initially the core shall be shipped as components and assembled at NNRDC. Under this concept, a consideration will be to achieve maximum engine test capability from each complete engine unit.

The task of developing transport, handling, and maintenance equipment to satisfy the requirements of the NERVA engine must first consider the functions for which such equipment is intended. It must also consider that these functions are to be performed during cold, clean conditions only. Some of the equipment involved could, however, with modification, be used in hot operations, e.g., subassembly stands, slings, and, in some instances, shipping containers.

The program of establishing handling equipment to perform such tasks as engine assembly, preparation of a complete engine or engine subassembly for shipping, receiving, handling through cold operations, subassembly replacement, minor maintenance, etc., requires the performance of an engine systems analysis.

Planning for the design, development, evaluation, and modification of the equipment herein discussed will be programmed in conjunction with remote-handling systems and checkout and test systems in supporting the systems analysis to satisfy the NERVA CITS, NRX, and E-engine requirements. This program will identify all pieces of ground-handling and maintenance equipment. It will establish the design criteria and specifications by the knowledge of the subassemblies with which the equipment must deal, and the conditions under which the equipment must perform the operation. Design work will be initiated for the equipment by virtue of the design criteria set forth. It will program the procurement of parts, the start of fabrication, the acceptance testing to insure compatibility with the application and utilization, and the packaging and shipping of the equipment. Provisions will be made for the delivery of the equipment to its destination in advance of the time required by the engine for support use.

In a project such as NERVA, where engine design details are subject to change due to development and refinements, it is necessary for handling-equipment designs to be continuously reviewed and evaluated for improvements and for modifications.

Figure IV-C-1-8 illustrates the locations and identities of the various types of ground handling and maintenance equipment.

The paragraphs below describe the preliminary usages under the major categories of handling, transport, and maintenance and assembly. The usages specified concern themselves only with cold operations needed for the NERVA E-engines.

(1) Handling Equipment

The equipment in this category is concerned with operations performed at the engine and reactor manufacturers' plants and at the MAD or E-MAD buildings at NNRDC. Equipment such as cranes, hoists, slings, fork lifts, and dollies involves engine or engine subassembly lifting, positioning, and point-to-point movement within complexes. Equipment such as containers

and casks deals with preparation for shipment between complexes. Other equipment such as pallets and receiving stands provides a convenient method of subassembly positioning for inspection and attaching slings for movement to an assembly point.

(2) Transport Equipment

The equipment for this function will include that required for shipment of the engine and its subassemblies, or the reactor and its subassemblies, from the point of manufacture to NNRDC. Such equipment will also be used for return of the items to the manufacturer should any be rejected due to malfunction at any time prior to the test. None of this equipment will be used for parts shipment after testing due to the high radiation level involved. Equipment in this category will include transport trailers and their shipping adapters, and various subassembly shipping containers.

(3) Maintenance and Assembly Equipment

The performance of operations involving assembly of components, their cold disassembly and replacement, and the maintenance effort on the engine and its subassemblies will establish the requirements for equipment in this category. Such operations embody the use of tools and maintenance platforms for use on all parts of the engine and reactor. Subassembly stands are needed to receive component parts for each of the functions mentioned above.

Operation and maintenance manuals will be developed covering all cold operations involving assembly, disassembly, transport, handling, and inspection of the NERVA CITS, NRX, and E-series engine and its subassemblies.

The evaluation of type, kind, quantity, and utilization of equipment required to accomplish the NERVA handling and maintenance support will continue throughout the engine development program.

Figure IV-C-1-9 shows a preliminary list of equipment and schedule of operation.

e. Extended Phase I Support-Equipment-System Program (11 January through 30 September 1962)

The purpose of this program is to plan and initiate development of the remote handling system, checkout and test system, and transport, ground handling, and maintenance system for the component irradiation test system program, the NRX reactor program, and the NERVA engine program. The support-equipment requirements of the CITS program

are, in practically all cases, the first-generation support equipment for the E-engine system.

The major goal of this program will be to provide the initial design and fabrication for the CITS program.

The CITS program will require remote handling equipment to install and remove the NERVA non-nuclear subassembly from the test stand, remote handling equipment to install or remove the CITS reactor from the test stand, transport for both items to and from the interim MAD and E-MAD buildings, remote assembly and disassembly tooling for the engine test assemblies, remote disassembly tooling for the engine subassemblies, remote disassembly tooling for engine components, and tooling for remote assembly and disassembly of the CITS reactor.

The main item of equipment that will be required is the engine installation vehicle. It is anticipated that the design criteria will be completed soon after 11 January 1962 and that detail design will be immediately authorized. Fabrication of the EIV will be well along by the end of this work period.

The second important area of immediate action will be CITS assembly and disassembly tooling and the remote handling equipment for the E-MAD building at NNRDC in support of CITS, NRX, and E-engine. In both cases, design criteria will be written and preliminary detail design will be authorized.

The third area requiring immediate attention is threefold: (1) design criteria, detail design, and fabrication will be authorized for transport and ground handling equipment for the CITS program, (2) authorization to study the suitability of LASL/ACFI equipment to satisfy the NRX and CITS reactor remote-handling-equipment requirements will be made, and (3) design criteria will be written for CITS-program post-mortem tooling.

The last area of endeavor will be to develop an integrated system plan to effectively support the NERVA engine by (1) identifying all end items of support equipment, (2) identifying facility requirements and interfaces related to this equipment, (3) contributing to the development of the NERVA maintenance concept, and (4) providing design feedback for the NERVA engine design criteria.

UNCLASSIFIED

AGC APPROACH TO GROUND
SUPPORT EQUIPMENT SYSTEMS ENGINEERING

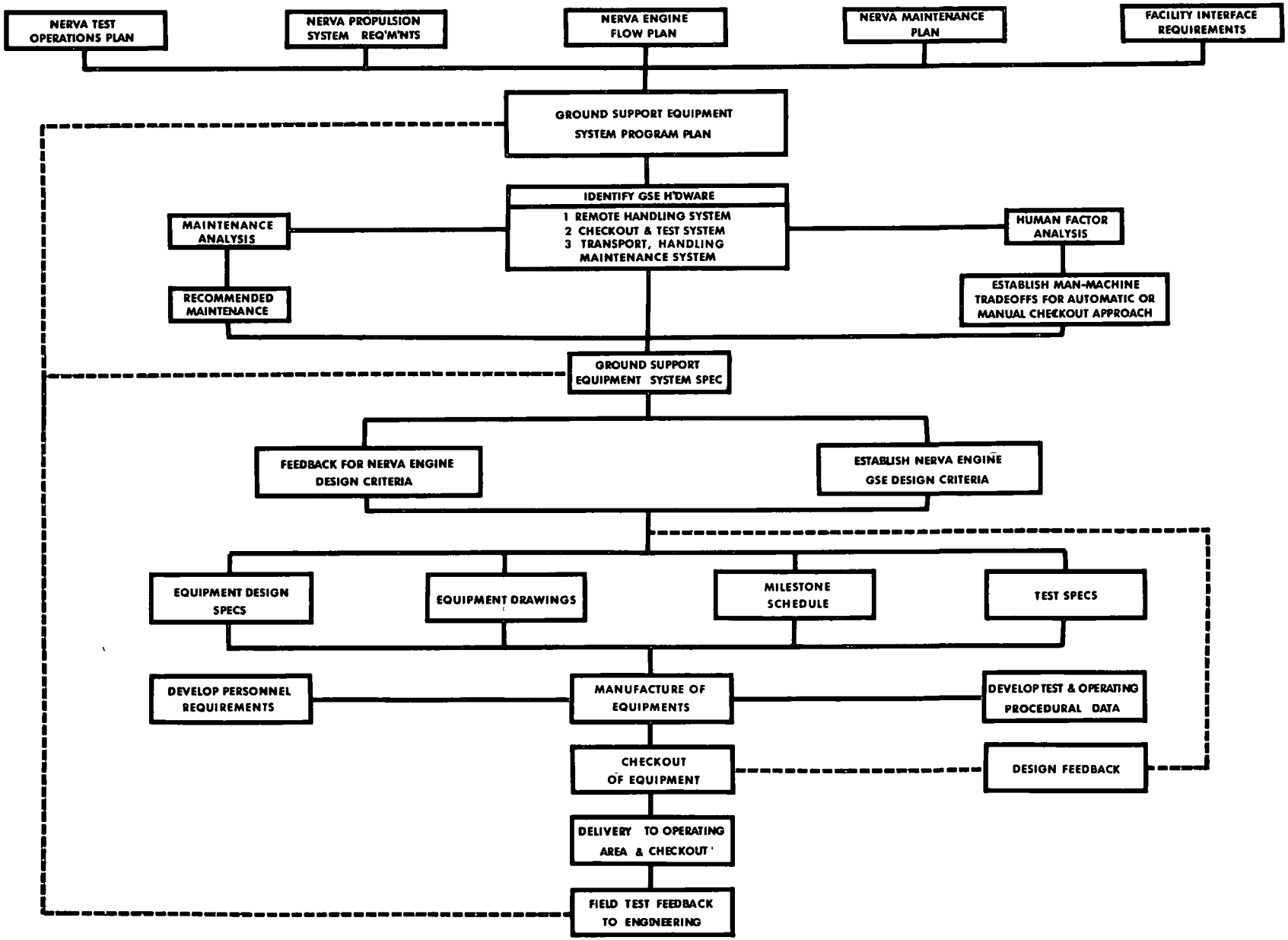

Fig. IV-C-1-1, Vol. I

UNCLASSIFIED

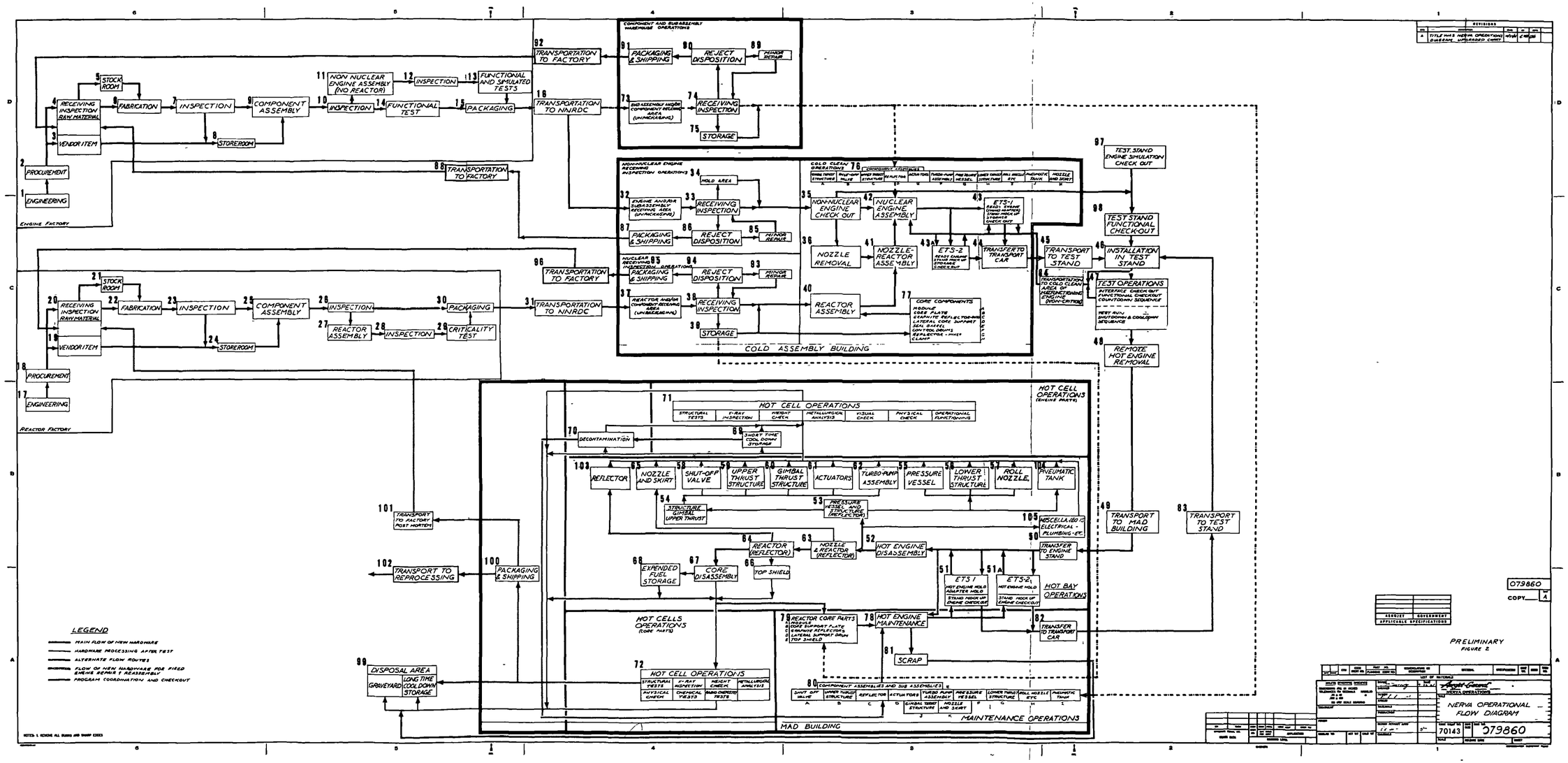

Fig. IV-C-1-2, Vol. I

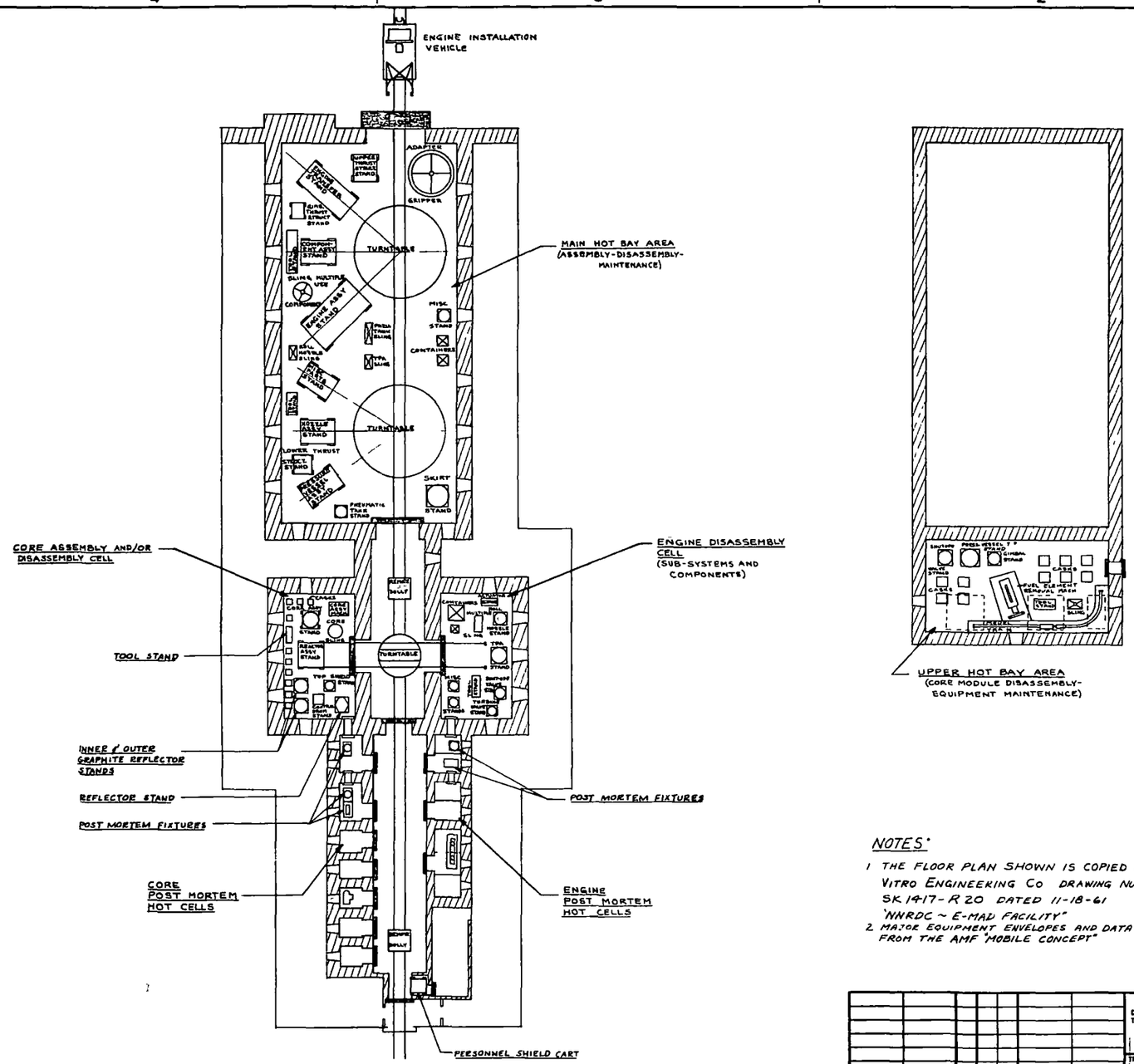

REVISIONS

SYM	DESCRIPTION	DATE	BY	APPRD

REMOTE HANDLING EQUIPMENT

081111

COPY ____

AEROJET	GOVERNMENT
APPLICABLE SPECIFICATIONS	

NOTES:

1. THE FLOOR PLAN SHOWN IS COPIED FROM VITRO ENGINEERING CO DRAWING NUMBER SK 1417-R 20 DATED 11-18-61 "NNRDC ~ E-MAD FACILITY"
2. MAJOR EQUIPMENT ENVELOPES AND DATA TAKEN FROM THE AMF "MOBILE CONCEPT"

QTY REQD	SYM	CODE IDENT NO.	PART NO. PLANNING	PART NO. IDENT NO.	NOMENCLATURE OR DESCRIPTION	MATERIAL	SPECIFICATION	UNIT WT	ZONE	ITEM NO.

LIST OF MATERIALS

QN	THRU	EFFECTIVE SERIAL NO.
USAGE DATA		

PART DASH NO.	NEXT	FINAL	NEXT ASSY	USED ON
	QTY REQD PER ASSY		APPLICATION	
DRAWING LEVEL				

UNLESS OTHERWISE SPECIFIED
DIMENSIONS ARE IN INCHES
TOLERANCES ON DECIMALS ANGULAR
.XX ± .03 ±
.XXX ± .010
DO NOT SCALE DRAWING

TREATMENT

FINISH

SIMILAR TO: ACT WT CALC WT

		DATE
DRAWN		
CHECKED		
DESIGN	R. ALLEN	11/29/61
STRESS		
MATERIALS		
PRODUCTION		
DESIGN ACTIVITY APPD		12/1/61
CUSTOMER		

Aerojet-General
NERVA OPERATIONS

TITLE
PRELIMINARY ARRANGEMENT
E-MAD FLOOR PLAN
EQUIPMENT LOCATIONS

CODE IDENT NO.	DWG SIZE	DWG NO.
70143	D	081111

SCALE NONE | RELEASE DATE | SHEET

NOTES: 1. REMOVE ALL BURRS AND SHARP EDGES

Fig. IV-C-1-3, Vol. I

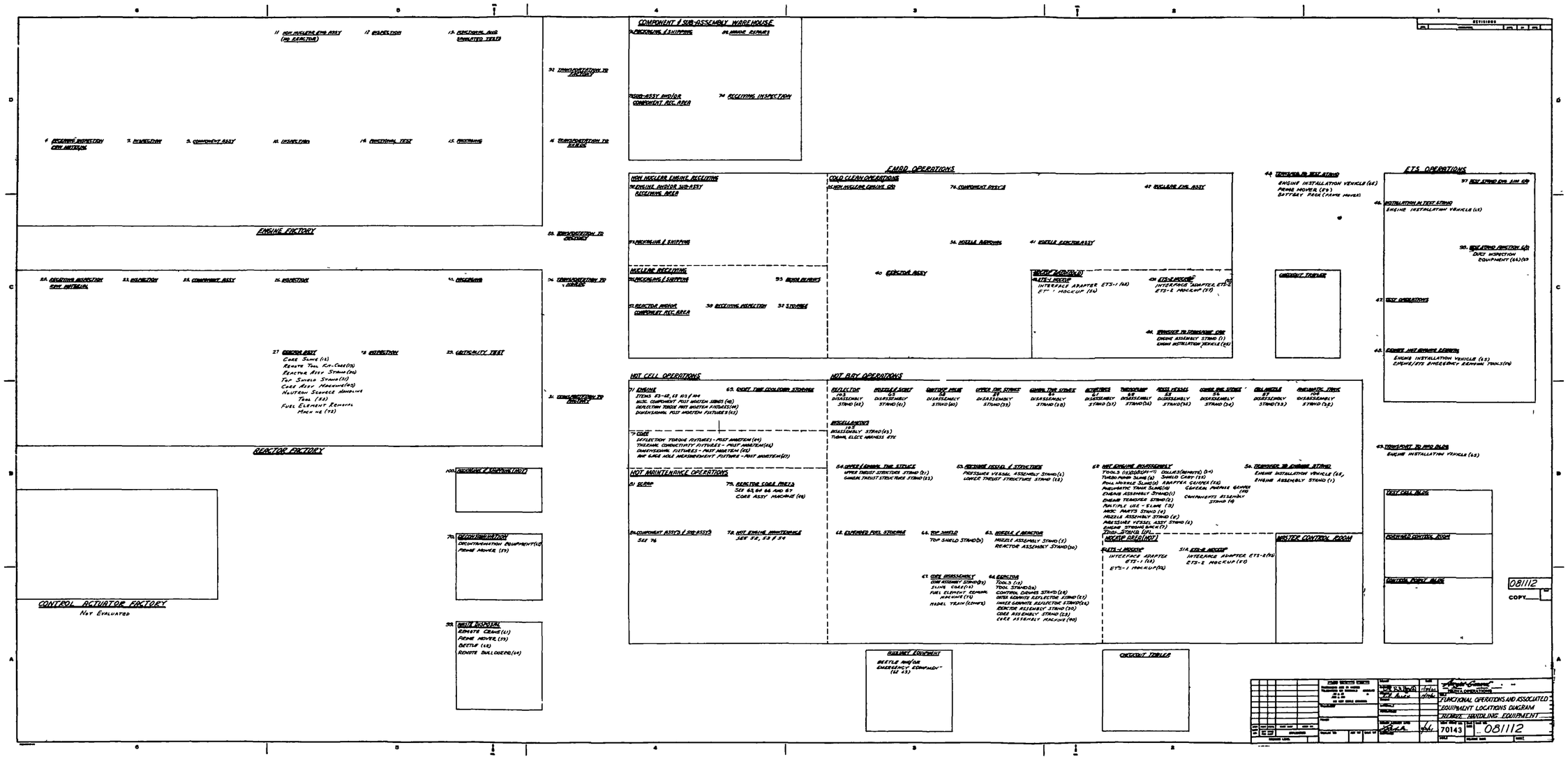

Fig. IV-C-1-4, Vol. I

~~CONFIDENTIAL~~

Remote Handling and Transportation

PRELIMINARY EQUIPMENT LIST AND SCHEDULES

NERVA PROGRAM

		No. Reqd	Location: Eng. Fact	Location: Test Fact	Location: NNRDC	1962 Jan	Feb	Mar	Apr	May	Jun	Jul	Aug	Sep	Oct	Nov	Dec	1963 Jan	Feb	Mar	Apr	May	Jun	Jul	Aug	Sep	Oct	Nov	Dec
1	Engine Assembly Stand	/			✓				✱						Δ			∇	○								□		◊
2	Engine Transfer Stand	/			✓										Δ			∇	○								□		◊
3	Components Assembly Stand	/			✓				✱						Δ			∇	○								□		◊
4	Miscellaneous Parts Stand	/			✓				✱						Δ			∇	○								□		◊
5	Nozzle Assembly Stand	/			✓										Δ			∇	○								□		◊
6	Pressure Vessel Assembly Stand	/			✓										Δ			∇	○								□		◊
7	Engine Strongback	/			✓										Δ			∇	○									□	◊
8	Sling - Turbopump	/			✓				✱						Δ			∇	○									□	◊
9	Sling - Multiple Use, Components	/			✓				✱						Δ			∇	○									□	◊
10	Sling - Pneumatic Tank	/			✓				✱						Δ			∇	○									□	◊
11	Sling - Roll Nozzle	/			✓				✱						Δ			∇	○									□	◊
12	Sling - Core	2		✓	✓										Δ			∇	○				⊠ ◊					□	◊
13	Remote Tool Kit - Turbopump	/			✓				✱						Δ			∇	○									□	◊
14	Remote Tool Kit - Prop. Valve	/			✓				✱						Δ			∇	○									□	◊
15	Remote Tool Kit - Engine	/			✓				✱						Δ			∇	○									□	◊
16	Remote Tool Kit - Roll Nozzle	/			✓				✱						Δ			∇	○									□	◊
17	Remote Tool Kit - Actuators	/			✓				✱						Δ			∇	○									□	◊
18	Tool Stand - Engine	/			✓				✱						Δ			∇	○									□	◊
19	Remote Tool Kit - Core	2		✓	✓										Δ			∇	○				⊠ ◊					□	◊
20	Tool Stand - Core	/			✓										Δ			∇	○									□	◊
21	Upper Thrust Structure Stand	/			✓				✱						Δ			∇	○									□	◊
22	Lower Thrust Structure Stand	/			✓				✱						Δ			∇	○									□	◊
23	Gimbal Thrust Structure Stand	/			✓				✱						Δ			∇	○									□	◊
24	Remote Dollies	/			✓										Δ			∇	○								□		◊
25	Personnel Shield Cart	/			✓				✱								Δ			∇	○						□		◊
26	Inner Graphite Reflector Stand	/			✓										Δ			∇	○									□	◊
27	Outer Graphite Reflector Stand	/			✓										Δ			∇	○									□	◊
28	Control Drums Stand	/			✓										Δ			∇	○									□	◊
29	Core Assembly Stand	/			✓										Δ			∇	○									□	◊

Δ Engineering ○ Start-Fabrication ∇ Procurement ⊠ Delivery & Start Activation at Factory ✱ Start Engineering if Req'd for CITS ◊ Activation Complete at Factory □ Delivery & Start Activation at NNRDC ◊ Activation Complete at NNRDC

Fig. IV-C-1-5 (Sheet 1), Vol. I

~~CONFIDENTIAL~~

Remote Handling and Transportation

PRELIMINARY EQUIPMENT LIST AND SCHEDULES

NERVA PROGRAM

		No. Reqd	Location: Eng. Fact.	Location: Test Fact	Location: NNRDC	1962 Jan	Feb	Mar	Apr	May	Jun	Jul	Aug	Sep	Oct	Nov	Dec	1963 Jan	Feb	Mar	Apr	May	Jun	Jul	Aug	Sep	Oct	Nov	Dec
30	Reactor Assembly Stand	2		✓	✓										Δ			∇	○			☒	◊					□	◊
31	Top Shield Stand	2		✓	✓										Δ			∇	○			☒	◊					□	◊
32	Post Mortem Disassembly Stand - Pneumatic Tank	1			✓				*						Δ			∇	○									□	◊
33	" " Roll Nozzle	1			✓				*						Δ			∇	○									□	◊
34	" - Lwr Thrust Struct.	1			✓				*						Δ			∇	○									□	◊
35	" - Pressure Vessel	1			✓										Δ			∇	○									□	◊
36	" - Turbopump	1			✓				*						Δ			∇	○									□	◊
37	" - Actuators	1			✓				*						Δ			∇	○									□	◊
38	" - Gimbal Thrust Struct.	1			✓				*						Δ			∇	○									□	◊
39	" - Upper Thrust Struct.	1			✓				*						Δ			∇	○									□	◊
40	" - Shutoff Valve	1			✓				*						Δ			∇	○									□	◊
41	" - Nozzle & Skirt	1			✓										Δ			∇	○									□	◊
42	" - Reflector	1			✓				*						Δ			∇	○									□	◊
43	" - Miscellaneous	2			✓										Δ			∇	○									□	◊
44	Post Mortem Hot Cell Fixtures - Torque Deflection	2			✓				*								Δ			∇	○							□	◊
45	" - Dimensional	2			✓				*								Δ			∇	○							□	◊
46	" - Thermal Conductivity	1			✓												Δ			∇	○							□	◊
47	" - Air Gage Hole Measurement	2			✓												Δ			∇	○							□	◊
48	" - Miscellaneous	4			✓												Δ			∇	○							□	◊
49	Core Assembly Machine	2		✓	✓										Δ			∇	○			☒	◊					□	◊
50	Engine/ETS Emergency Removal Tools	1			✓				*								Δ			∇	○							□	◊
51	Thrust Chamber Tool Kit	1			✓										Δ			∇	○									□	◊
52	Gimbal Tool Kit	1			✓				*						Δ			∇	○									□	◊
53	Neutron Source Handling Tool	2		✓	✓				*						Δ			∇	○			☒	◊					□	◊
54	Post Mortem Disassembly Stand - Turbine Valves	1			✓				*						Δ			∇	○									□	◊
55	~~Adapter~~ Gripper	1			✓				*						Δ			∇	○									□	◊
56	ETS-1 Mockup	2			✓				*						Δ			∇	○							□	◊		
57	ETS-2 Mockup	2			✓										Δ			∇	○							□	◊		
58	General Purpose Gripper	1			✓				*						Δ			∇	○									□	◊

Δ Engineering ○ Start-Fabrication ∇ Procurement ☒ Delivery & Start Activation at Factory ◊ Activation Complete at Factory □ Delivery & Start Activation at NNRDC
* Start Engineering if Req'd for CITS ◊ Activation Complete at NNRDC

Fig. IV-C-1-5 (Sheet 2), Vol. I

~~CONFIDENTIAL~~

Remote Handling and Transportation

PRELIMINARY EQUIPMENT LIST AND SCHEDULES

NERVA PROGRAM		Location						1962												1963											
		No. Req'd		Eng. Fact	Exct Fact	NNRDC		Jan	Feb	Mar	Apr	May	Jun	Jul	Aug	Sep	Oct	Nov	Dec	Jan	Feb	Mar	Apr	May	Jun	Jul	Aug	Sep	Oct	Nov	Dec
59	Prime Mover (Remote)	1	GFE			✓		✱									Δ			∇	○								◊		
60	Manual Prime Mover (Diesel)	1	GFE			✓											Δ			∇	○										◊
61	Remote Crane	1	GFE			✓											Δ			∇	○										◊
62	Beetle	1	GFE			✓											Δ														◊
63	All Purpose Vehicle	1				✓											Δ						∇	○							
64	Remote Bulldozer	1	GFE			✓											Δ			∇	○										◊
65	Engine Installation Vehicle	1				✓		✱							Δ				∇	○									◊		
66	Duct Inspection Tool, ETS-1	1				✓											Δ			∇	○										◊
67	All Purpose Decontamination Stand	2				✓					✱						Δ			∇	○										◊
68	Interface Adapter ETS-1	2				✓					✱						Δ			∇	○								◊		
69	Duct Inspection Tool, ETS-2	1				✓											Δ			∇	○										◊
70	Prime Mover Battery Pack	2				✓					✱						Δ			∇	○								◊		
71	Remote Model Train	1				✓											Δ			∇	○										◊
72	Fuel Element Removal Machine	1			✓	✓											Δ			∇	○			⊠	◊						◊
73	Interface Adapter ETS-2	2				✓											Δ			∇	○								◊		

Δ Engineering ○ Start-Fabrication ∇ Procurement ⊠ Delivery & Start Activation at Factory ◊ Activation Complete at Factory ✱ Start Engineering if Req'd for CITS □ Delivery & Start Activation at NNRDC ◊ Activation Complete at NNRDC

Fig. IV-C-1-5 (Sheet 3), Vol. I

~~CONFIDENTIAL~~

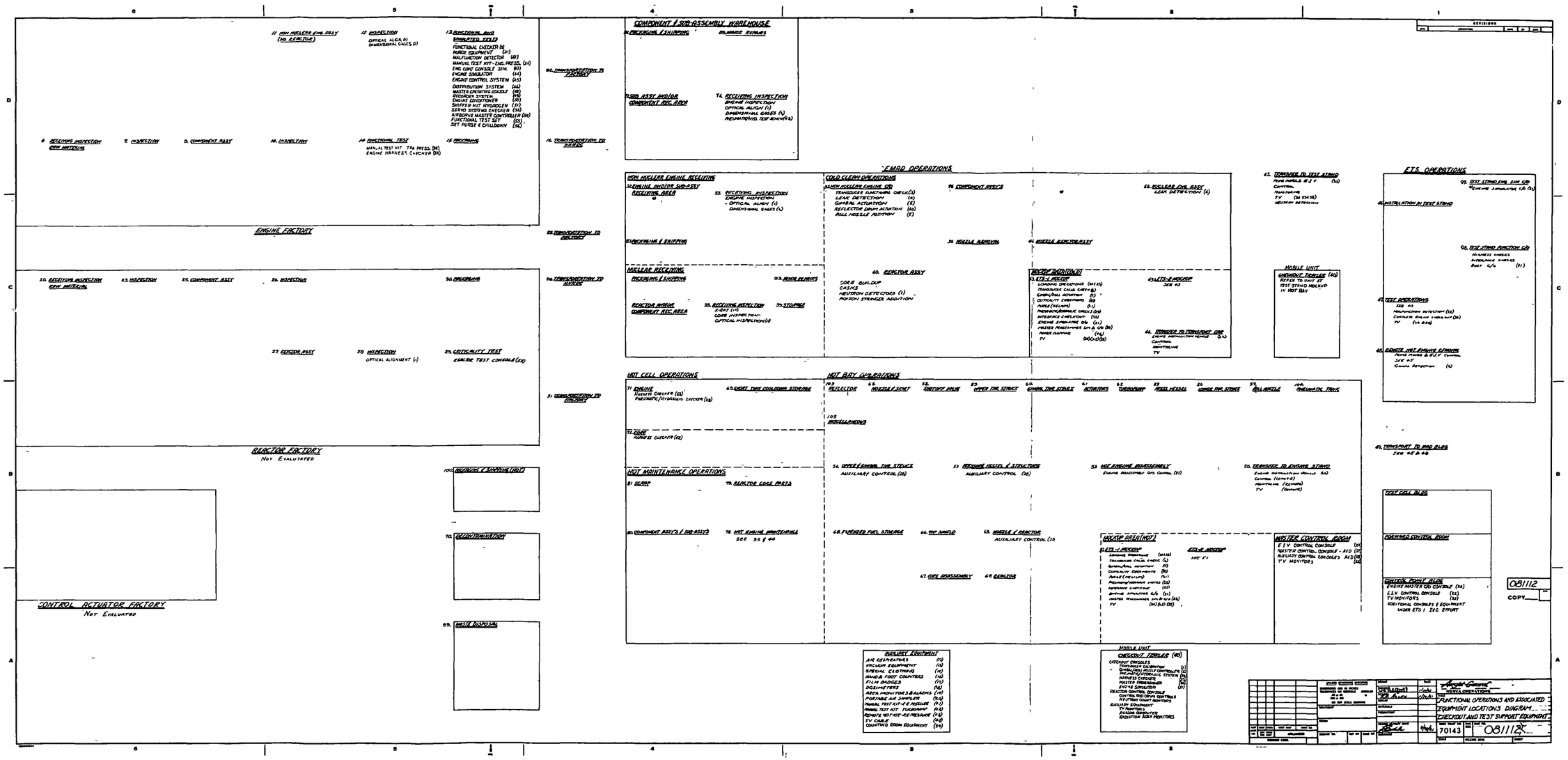

Fig. IV-C-1-6, Vol. I

CHECKOUT AND TEST SUPPORT

PRELIMINARY EQUIPMENT LIST AND SCHEDULES

NERVA PROGRAM

		Location					1962												1963											
		No. Req.		Eng. Fact	React Fact	NNRDC		Jan	Feb	Mar	Apr	May	Jun	Jul	Aug	Sep	Oct	Nov	Dec	Jan	Feb	Mar	Apr	May	Jun	Jul	Aug	Sep	Oct	Nov	Dec
1	Engine Optical Alignment Gage- Inspection	2		✓		✓											Δ			∇	○			⊠	◊			□	◊		
2	Dimensional Gage - Engine Inspection	2		✓		✓											Δ			∇	○			⊠	◊			□	◊		
3	Functional Checker - Engine	2		✓		✓											Δ			∇	○			⊠	◊			□	◊		
4	Leak Detectors (Sniffers)	5				✓															∇							□	◊		
5	Gimbal/Roll Deflection C/O	1				✓											Δ			∇	○							□	◊		
6	Functional Transducer (& Calibration) Checker	1				✓											Δ			∇	○							□	◊		
7	Neutron Detectors	20				✓																	∇					□	◊		
8	Neutron Counter Systems	20				✓																	∇					□	◊		
9	Gamma Detectors	40				✓																		∇						□	◊
10	Gamma Readout Systems	8				✓																		∇						□	◊
11	Core Optical Alignment Gage- Inspection	2			✓	✓											Δ			∇	○			⊠	◊			□	◊		
12	Air Respirators	12				✓																	∇					□	◊		
13	Vacuum Equipment	2				✓																	∇					□	◊		
14	X-Ray Equipment	1	GFE			✓																∇						□	◊		
15	Special Clothing	200				✓																		∇				□	◊		
16	Hand & Foot Counters	2				✓																	∇					□	◊		
17	Film Badges	500				✓																		∇				□	◊		
18	Dosimeters	500				✓																		∇				□	◊		
19	Area Monitors and Alarms	AS REQD				✓																∇						□	◊		
20	Portable Air Sampler	1				✓																	∇					□	◊		
21	Purge Equipment	3		✓		✓											Δ			∇	○			⊠	◊			□	◊		
22	ETS and E-MAD Engine Installation Vehicle- Control Console	2				✓									Δ				∇	○									◊		
23	Engine Installation Vehicle- Master Controller	1				✓									Δ				∇	○									◊		
24	T.V. Cameras	10				✓															∇							□	◊		
25	T.V. Monitors	8				✓																∇						□	◊		
26	Engine Master C/O Console - ETS-1	1				✓											Δ			∇	○							□	◊		
27	Assembly & Master Control Console- Disassembly	1				✓											Δ				∇	○							□	◊	
28	Assembly Auxilary Control Consoles- Disassembly	6				✓											Δ				∇	○							□	◊	
29	Pressure Pneumatic/Hydraulic(& Flow) Console	2				✓											Δ			∇	○							□	◊		

Δ-Engineering ○ Start-Fabrication ∇ Procurement ⊠ Delivery & Start Activation at Factory ◊ Activation Complete at Factory □ Delivery & Start Activation at NNRDC
✱ Start Engineering if Req'd for CITS ◊ Activation Complete at NNRDC

Fig. IV-C-1-7 (Sheet 1), Vol. I

CHECKOUT AND TEST SUPPORT — PRELIMINARY EQUIPMENT LIST AND SCHEDULE

NERVA PROGRAM

		Location					1962												1963											
		No. Req.		Eng. Fact	React Fact	NNRDC		Jan	Feb	Mar	Apr	May	Jun	Jul	Aug	Sep	Oct	Nov	Dec	Jan	Feb	Mar	Apr	May	Jun	Jul	Aug	Sep	Oct	Nov	Dec
30	Master C/O Console-Engine Post Mortem	2				✓											Δ			∇	○									□	◊
31	Engine Simulator	1				✓											Δ			∇	○						□		◊		
32	ETS-1 C/O Console	1				✓					*						Δ			∇	○							□	◊		
33	Malfunction Detector	1				✓					*						Δ			∇	○							□	◊		
34	Manual Test Kit-Engine Pressure	1		✓		✓					*						Δ			∇	○			⊠	◊			□	◊		
35	Manual Test Kit-TPA Pressure	1		✓		✓					*						Δ			∇	○			⊠	◊			□	◊		
36	Remote Test Set-Engine Pressure	1				✓					*									Δ			∇	○						□	◊
37	Neutron Source	6			✓	✓																						□	◊		
38	T.V. Cable	AS REQD				✓																		∇				□	◊		
39	Counting Room Equipment	1				✓														∇								□	◊		
	Variable Hi Voltage Supply																														
	Scalers																														
	Ratemeters																														
	Recorders																														
	Shielded Counter Assemblies																														
	Spectral Analyzer																														
	Photomultipliers																														
	Geigers																														
40	Critical/Final C/O Trailer	1				✓											Δ			∇	○						□		◊		
	Reactor Control Console																														
	Engine Master C/O Console																														
	Neutron Counting System																														
	Area Monitors & Alarms																														
41	Deflector Duct C/O Console-ETS	2				✓					*						Δ			∇	○							□	◊		
42	Component Pneumatic/Hydraulic Test Bench	1				✓					*						Δ			∇	○							□	◊		
43	Engine Control Console Simulator	1		✓				*									Δ		∇	○					⊠ ◊						
44	Engine Simulator (Factory)	1		✓													Δ		∇	○					⊠ ◊						
45	Engine Control System	1		✓				*									Δ		∇	○					⊠ ◊						
46	Distribution System	1		✓				*									Δ		∇	○					⊠ ◊						

Δ Start-Engineering ○ Start-Fabrication ∇ Procurement ⊠ Delivery & Start Activation at Factory
* Start Engineering if Req'd by CITS
◊ Activation Complete at Factory
□ Delivery & Start Activation at NNRDC
◊ Activation Complete at NNRDC

Fig. IV-C-1-7 (Sheet 2), Vol. I

CHECKOUT AND TEST SUPPORT

PRELIMINARY EQUIPMENT LIST AND SCHEDULES

NERVA PROGRAM

		No. Rqed	Location: Eng. Fact	Location: React Fact	Location: NNRDC	1962 Jan	Feb	Mar	Apr	May	Jun	Jul	Aug	Sep	Oct	Nov	Dec	1963 Jan	Feb	Mar	Apr	May	Jun	Jul	Aug	Sep	Oct	Nov	Dec
47	Malfunction Detector (Non Nuclear Engine)	1	✓			✱									Δ		∇	○				⊠	⊕						
48	Master Operating Console	1	✓			✱									Δ		∇	○				⊠	⊕						
49	Recorder System	1	✓			✱									Δ		∇	○				⊠	⊕						
50	Engine Conditioner	1	✓			✱									Δ		∇	○				⊠	⊕						
51	Sniffer Kit Hydrogen	2	✓												Δ		∇	○				⊠	⊕						
52	Servo Systems Checker - Portable	1	✓			✱									Δ		∇	○				⊠	⊕						
53	Engine Harness Checker - Portable	2	✓		✓	✱									Δ		∇	○				⊠	⊕			□	◊		
54	Airborne Master Controller Checker Portable	1	✓			✱									Δ		∇	○				⊠	⊕						
55	Functional Test Set	1	✓			✱									Δ		∇	○				⊠	⊕						
56	Set, Purge and Chilldown	1	✓			✱									Δ		∇	○				⊠	⊕						
57	Post Mortem C/O Consoles-Hot Cells	3			✓										Δ			∇	○									□	◊
58	Reactor Test Console			✓											Δ		∇	○				⊠	⊕						

Δ Start-Engineering ○ Start-Fabrication ∇ Procurement ⊠ Delivery & Start Activation at Factory ✱ Start Engineering if Req'd for CITB ⊕ Activation Complete at Factory □ Delivery & Start Activation at NNRDC ◊ Activation Complete at NNRDC

Fig. IV-C-1-7 (Sheet 3), Vol. I

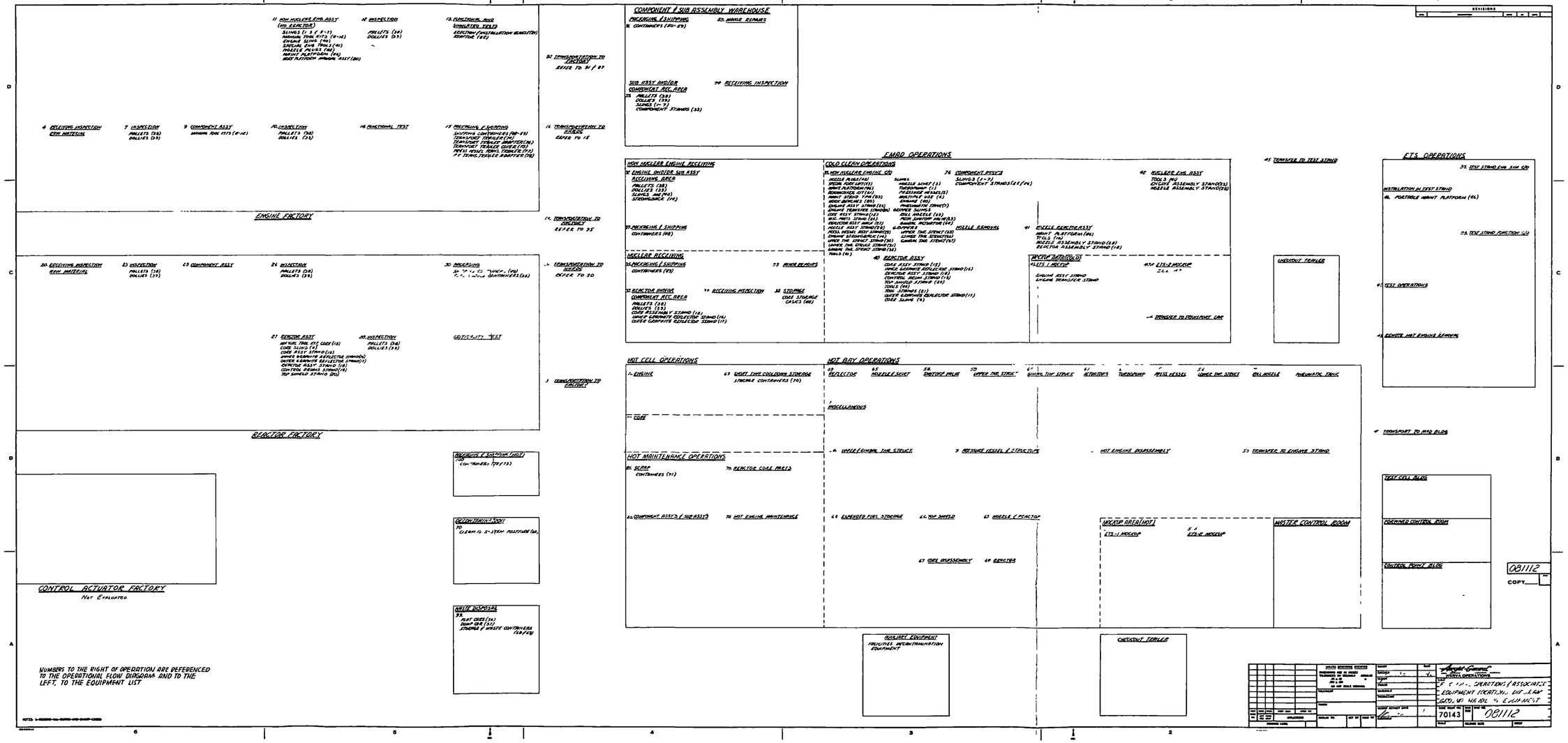

Fig. IV-C-1-8, Vol. I

~~CONFIDENTIAL~~

Ground Handling and Transportation

PRELIMINARY EQUIPMENT LIST AND SCHEDULE

NERVA PROGRAM

		Location						1962												1963											
		No. Reqd		Eng. Fact		React Fact	NNRDC	Jan	Feb	Mar	Apr	May	Jun	Jul	Aug	Sep	Oct	Nov	Dec	Jan	Feb	Mar	Apr	May	Jun	Jul	Aug	Sep	Oct	Nov	Dec
1	Sling - Turbopump	4		✓			✓				*						Δ		∇	○				⊠	◊			□	◊		
2	Sling - Pressure Vessel	4		✓			✓										Δ		∇	○				⊠	◊			□	◊		
3	Sling - Nozzle & Skirt	4		✓			✓										Δ		∇	○				⊠	◊			□	◊		
4	Sling - Core	4				✓	✓				*						Δ		∇	○				⊠	◊			□	◊		
5	Sling - Horizontal, Engine	4		✓			✓										Δ		∇	○				⊠	◊			□	◊		
6	Sling - Multiple Use, Components	4		✓			✓				*						Δ		∇	○				⊠	◊			□	◊		
7	Sling - Pneumatic Tank	4		✓			✓				*						Δ		∇	○				⊠	◊			□	◊		
8	Manual Tool Kit - Turbopump	3		✓			✓				*						Δ		∇	○				⊠	◊			□	◊		
9	Manual Tool Kit - Prop. Valve	3		✓			✓				*						Δ		∇	○				⊠	◊			□	◊		
10	Manual Tool Kit - Maintenance, Engine	4		✓			✓				*						Δ		∇	○				⊠	◊			□	◊		
11	Manual Tool Kit - Lapping TPA	1		✓							*						Δ		∇	○				⊠	◊						
12	Manual Tool Kit - Roll Nozzle	3		✓			✓				*						Δ		∇	○				⊠	◊			□	◊		
13	Manual Tool Kit - Core	4				✓	✓										Δ		∇	○				⊠	◊			□	◊		
14	Engine Strongback	4		✓			✓										Δ		∇	○				⊠	◊			□	◊		
15	Core Assembly Stand	4				✓	✓				*						Δ		∇	○				⊠	◊			□	◊		
16	Inner Graphite Reflector Stand	4				✓	✓										Δ		∇	○				⊠	◊			□	◊		
17	Outer Graphite Reflector Stand	4				✓	✓										Δ		∇	○				⊠	◊			□	◊		
18	Reactor Assembly Stand	4				✓	✓										Δ		∇	○				⊠	◊			□	◊		
19	Control Drums Stand	4				✓	✓										Δ		∇	○				⊠	◊			□	◊		
20	Top Shield Stand	4				✓	✓										Δ		∇	○				⊠	◊			□	◊		
21	Core Tool - Stand	2					✓				*										Δ		∇	○				□	◊		
22	Engine Tool Stand	2					✓				*										Δ		∇	○				□	◊		
23	Engine Assembly Stand	1					✓				*						Δ			∇	○							□	◊		
24	Engine Transfer Stand	1					✓										Δ			∇	○							□	◊		
25	Component Assembly Stand	1					✓				*						Δ			∇	○							□	◊		
26	Miscellaneous Parts Stand	1					✓				*						Δ			∇	○							□	◊		
27	Reflector Assembly Machine	1					✓										Δ			∇	○							□	◊		
28	Nozzle Assembly Stand	1					✓										Δ			∇	○							□	◊		
29	Pressure Vessel Assembly Stand	1					✓										Δ			∇	○							□	◊		

Δ Start-Engineering ○ Start-Fabrication ∇ Procurement ⊠ Delivery & Start Activation at Factory ◊ Activation Complete at Factory □ Delivery & Start Activation at NNRDC ◊ Activation Complete at NNRDC

* Start Engineering if Req'd for CITS

Fig. IV-C-1-9 (Sheet 1), Vol. I

~~CONFIDENTIAL~~

Ground Handling And Transportation

PRELIMINARY EQUIPMENT LIST AND SCHEDULE

NERVA PROGRAM

		Location						1962												1963											
		No. Req'd		Eng. Fact	React Fact	NNRDC		Jan	Feb	Mar	Apr	May	Jun	Jul	Aug	Sep	Oct	Nov	Dec	Jan	Feb	Mar	Apr	May	Jun	Jul	Aug	Sep	Oct	Nov	Dec
30	Upper Thrust Structure Stand	1				✓					*						Δ			∇	○							□	◊		
31	Lower Thrust Structure Stand	1				✓					*						Δ			∇	○							□	◊		
32	Gimbal Thrust Structure Stand	1				✓					*						Δ			∇	○							□	◊		
33	Miscellaneous Component Stands	4				✓					*						Δ			∇	○							□	◊		
34	Engine Erection Gripper	1				✓											Δ			∇	○							□	◊		
35	Container Fuel Module	40			✓	✓											Δ			∇	○			⊠	◊			□	◊		
36	Flat Cars	2	GFE			✓											Δ												□	◊	
37	Dump Car	1	GFE			✓											Δ													□	◊
38	Pallets	48		✓	✓	✓					*						Δ			∇	○			⊠	◊			□	◊		
39	Dollies	4		✓	✓	✓					*						Δ			∇	○			⊠	◊			□	◊		
40	Sling - Engine	2		✓		✓											Δ			∇	○			⊠	◊			□	◊		
41	Special Tools - Engine	4		✓		✓					*						Δ			∇	○			⊠	◊			□	◊		
42	Nozzle Plugs	6		✓		✓											Δ			∇	○			⊠	◊			□	◊		
43	Special Fork Lift	1				✓					*						Δ			∇	○							□	◊		
44	Special Tools - Core	4			✓	✓											Δ			∇	○			⊠	◊			□	◊		
45	Storage Casks - Core	8			✓	✓											Δ			∇	○			⊠	◊			□	◊		
46	Maintenance Platform	1		✓		✓					*						Δ			∇	○			⊠	◊			□	◊		
47	Special Tools- Poison Stringer Removal	1				✓														Δ		∇	○						□	◊	
48	Shipping Containers - Engine	3		✓		✓											Δ			∇	○					⊠	◊	□	◊		
49	Shipping Containers - Core	3			✓	✓											Δ			∇	○					⊠	◊	□	◊		
50	Shipping Containers - Roll Nozzle	2		✓		✓					*						Δ			∇	○					⊠	◊	□	◊		
51	Shipping Containers - Up. Thrust. Str.	2		✓		✓					*						Δ			∇	○					⊠	◊	□	◊		
52	Shipping Containers - Lwr. Thrust. Str.	2		✓		✓					*						Δ			∇	○					⊠	◊	□	◊		
53	Shipping Containers - Gimbal Thrust Struct.	2		✓		✓					*						Δ			∇	○					⊠	◊	□	◊		
54	Shipping Containers - Pressure Vessel	2		✓		✓											Δ			∇	○					⊠	◊	□	◊		
55	Shipping Containers - Turbopump	2		✓		✓					*						Δ			∇	○					⊠	◊	□	◊		
56	Shipping Containers - Pneumatic Tank	2		✓		✓					*						Δ			∇	○					⊠	◊	□	◊		
57	Shipping Containers - Prop. Shutoff Valve	2		✓		✓					*						Δ			∇	○					⊠	◊	□	◊		
58	Shipping Containers - Nozzle Skirt	2		✓		✓											Δ			∇	○					⊠	◊	□	◊		

Δ Start-Engineering ○ Start-Fabrication ∇ Procurement ⊠ Delivery & Start Activation at Factory ◊ Activation Complete at Factory □ Delivery & Start Activation at NNRDC ◊ Activation Complete at NNRDC

* Start Engineering if Req'd for CITS

Fig. IV-C-1-9 (Sheet 2), Vol. I

Ground Handling and Transportation

PRELIMINARY EQUIPMENT LIST AND SCHEDULE

NERVA PROGRAM

		No. Reqd	Location: Eng. Fact	Location: React Fact	Location: NNRDC	1962 Jan	Feb	Mar	Apr	May	Jun	Jul	Aug	Sep	Oct	Nov	Dec	1963 Jan	Feb	Mar	Apr	May	Jun	Jul	Aug	Sep	Oct	Nov	Dec
59	Shipping Container - Nozzle	2		✓		✓												Δ			∇	○				⊠	◊	□	◊		
60	Cleaning System - Postfire	1				✓						*									Δ			∇	○				□		◊
61	Dehumidifier Kit	2		✓		✓						*						Δ			∇	○				⊠	◊	□	◊		
62	Gripper Sling - Roll Nozzle	1				✓						*						Δ			∇	○						□	◊		
63	Gripper Sling - Prop. Shutoff Valve	1				✓						*						Δ			∇	○						□	◊		
64	Gripper Sling - Gimbal Actuator	1				✓						*						Δ			∇	○						□	◊		
65	Gripper - Upper Thrust Structure	1				✓						*						Δ			∇	○						□	◊		
66	Gripper - Lower Thrust Structure	1				✓						*						Δ			∇	○						□	◊		
67	Gripper - Gimbal Thrust Structure	1				✓						*						Δ			∇	○						□	◊		
68	Disposal Container - Core	6			✓	✓																Δ		∇	○				⊠	◊	□	◊
69	Disposal Container - Engine	1				✓																Δ		∇	○						□	◊
70	Sterage Container - Hot Engine Components	6				✓						*										Δ		∇	○						□	◊
71	Disposal Container - Components	4				✓						*										Δ		∇	○						□	◊
72	Shipping Casks - Hot Core Parts	8				✓												Δ		∇	○										□	◊
73	Shipping Casks - Hot Modules	25				✓												Δ		∇	○										□	◊
74	Transport Trailer - Engine	1		✓														Δ		∇	○					⊠	◊					
75	Cover, Transport Trailer - Engine	1		✓														Δ			∇	○				⊠	◊					
76	Adapter, Trailer - Engine	1		✓														Δ		∇	○					⊠	◊					
77	Transport Trailer - Pressure Vessel	1		✓														Δ		∇	○					⊠	◊					
78	Adapter/Shipping Closure Trailer - Pr. Ves.	1		✓														Δ		∇	○					⊠	◊					
79	Dolly, Storage - Handling & C/O - Engine	1		✓														Δ		∇	○				⊠	◊						
80	Work Platform, Manual Assy - Engine	1		✓						*								Δ		∇	○				⊠	◊						
81	Erection & Installation Vehicle Engine	1		✓														Δ		∇	○				⊠	◊						
82	Adapter, Erection & Installation Vehicle	1		✓														Δ		∇	○				⊠	◊						
83	Stand, Assy & Maintenance - TPA	1		✓						*								Δ		∇	○				⊠	◊						
84	Truck, Storage & Handling - Nozzle	1		✓														Δ		∇	○				⊠	◊						
85	Sling - Skirt	1		✓		✓												Δ		∇	○				⊠	◊						
86	Adapter, Installation - Press. Ves.	1		✓														Δ		∇	○				⊠	◊						
87	Hanger, Storage - Engine	1		✓														Δ		∇	○				⊠	◊						

Δ Start-Engineering ○ Start-Fabrication ∇ Procurement ⊠ Delivery & Start Activation at Factory ◊ Activation Complete at Factory □ Delivery & Start Activation at NNRDC
* Start Engineering if Req'd for CITS ◊ Activation Complete at NNRDC

Fig. IV-C-1-9 (Sheet 3), Vol. I

~~CONFIDENTIAL~~

Ground Handling and Transportation

Preliminary Equipment List and Schedule

NERVA PROGRAM

		No. Reqd		Eng Fact	Reac Fact	NNRDC		1962 Jan	Feb	Mar	Apr	May	Jun	Jul	Aug	Sep	Oct	Nov	Dec	1963 Jan	Feb	Mar	Apr	May	Jun	July	Aug	Sep	Oct	Nov	Dec
88	Forklifts	3				✓					✳									∇								□	◊		
89	Containers - Reflector	2		✓		✓											Δ			∇	○					⊠◊		□	◊		

Δ Start - Engineering ○ Start - Fabrication ∇ Procurement ⊠ Delivery & Start Activation at Factory ◊ Activation Complete at Factory □ Delivery & Start Activation at NNRDC

✳ Start Engineering if Req'd for CITS ◊ Activation Complete at NNRDC

Fig. IV-C-1-9 (Sheet 4), Vol. I

~~CONFIDENTIAL~~

2. Diagnostic Instrumentation

a. General Considerations

The NERVA Diagnostic Instrumentation system consists of all transducers and their associated mounting fixtures, cables, harnesses, disconnects, and amplifiers, except those required for the NERVA control system. Two diagnostic instrumentation systems will be employed during the NERVA engine development program: a flight-test instrumentation system, and a ground-test instrumentation system.

The flight-test instrumentation system includes the transducers that will be mounted on the flight engine for diagnostic purposes and which will supply signals to the telemetry system. Flight transducers and their associated cabling, connectors, etc., will be used during ground testing to develop the flight-test instrumentation system.

During ground testing a much larger number of parameters must be measured than during flight testing. Therefore, a ground-test instrumentation system is required which will supplement the flight-test system during the ground-testing phase. During the engine ground testing, the electrical disconnects of both diagnostic instrumentation systems will engage the test cell connectors at the engine-test stand interface, and the transducer signals will be conditioned, amplified, and recorded by equipment supplied as part of the test-cell facility.

b. Problem Areas and Solutions

(1) General Discussion

The principal problems associated with the design of the NERVA Diagnostic Instrumentation system are the ambient radiation flux created by reactor operation and the temperature extremes of liquid and gaseous hydrogen.

(a) Radiation Flux

Materials normally used in rocket engine transducers (such as plastics, elastomers, and hydraulic oils) undergo major changes in tensile strength, volume resistivity, dielectric strength, and material breakdown after exposure to a radiation flux equivalent to that generated by the NERVA reactor. Also, both organic and inorganic electrical insulations exposed to high radiation dose rates are reduced in effectiveness. Organic

materials cannot therefore be used in transducers located near the reactor, and inorganic insulations will require special consideration in circuitry design to account for their varying resistivity.

It is expected that the NERVA engine transducers will be exposed to the environmental conditions listed below:

Location	Fast neutron flux neutrons/cm^2 - sec	Gamma flux mev/cm^2 - sec	Radiation Heating Btu/in.^{3} - sec (steel)
Below Reactor Shield	7×10^{13}	2×10^{14}	1.3×10^{-1}
Above Reactor Shield	4×10^{12}	1.3×10^{13}	8.6×10^{-3}

These dose rates necessitate the development of transducers using radiation-resistant components. Some transducers will also require that a coolant be provided to remove radiation-induced heat. The preferred transducer and its associated electronics should be low impedance devices to reduce the effect of radiation-induced insulation leakages, and they should also produce a large output signal so that a high signal-to-noise ratio is obtainable.

(b) Hydrogen Temperature Extremes

The measurement of gaseous hydrogen temperatures at approximately 4000°R will be solved by temperature transducers that are being developed under Task 1.5, Engine Controls.

The measurement of liquid hydrogen temperatures to the accuracies required by the hydrogen pump test effort requires transducers that are beyond the present state-of-the-art.

The following sections describe briefly the manner by which these problem areas can be solved for the various transducers and accessories of the NERVA instrumentation system.

(2) Pressure Transducers

A low-impedance wire-wound potentiometer-type pressure transducer, using a ceramic mandrel, appears at present to be the most promising pressure-sensing device because of its demonstrated reliability, radiation resistance, and high-level output signal. The problem areas of the potentiometer are its comparatively low resolution, frequency response, and accuracy. By means of analysis and tests it will be determined if these

characteristics are adequate for NERVA diagnostic purposes. Simultaneously, it will be determined if other types of pressure transducers can be employed. For example, weldable-unbonded strain-gauge pressure transducers will be tested for radiation damage and vibration resistance. Similarly, linear-variable-differential-transformer (LVDT) and variable-reluctance pressure transducers will be considered if it is determined that the additional a-c power supplies and ac-to-dc demodulators required by these instruments are acceptable.

Finally, any experience gained from the control-system pressure transducer development program will be used to select the various pressure transducers for diagnostic purposes.

(3) Temperature Transducers

Platinum resistance thermometers can be used to measure the temperature of liquid hydrogen and will, therefore, be used for many NERVA applications. Due to its small neutron-absorption cross-section, platinum does not suffer any transmutation damage when exposed to radiation. However, based on experience with similar metals, it is very likely that a platinum sensing element will suffer from crystalline damage when exposed to radiation, particularly at low temperatures where no curative annealing action can take place. Crystalline damage will, of course, cause a change in the resistivity of the platinum sensing element, resulting in an error in the temperature measurement. Therefore, a test program will be conducted to ascertain the extent of the radiation damage to platinum resistance-type temperature transducers. It is possible that corrections can be made to compensate for changes in resistivity due to radiation damage.

In order to determine the pump NPSH and reflector fluid phase, liquid hydrogen temperatures measurements have to be made, in the 20 to 40°K range, to accuracies and in physical locations that require temperature transducers beyond the present state-of-the-art. The NPSH of an LH_2 pump requires precise measurement of the temperature at the eye of the pump if temperature is to be used to determine vapor pressure. For example, 5 feet of vapor pressure head is represented by 0.03^{o}K. In order to establish adequate design for the NPSH parameter, an accuracy of at least 0.03^{o}K is considered necessary.

Reflector fluid phase determination is broken down into two areas; the determination of reflector wall temperature, and hydrogen fluid temperature. Evaluation of these parameters to within $\pm 1.0^{o}$ is considered adequate, and lies well within the capabilities of state-of-the-art transducers.

The problem for these transducers lies in their positioning. The very small cross-sectional fluid-flow area between the reflector assembly and the pressure vessel requires the miniaturization of the fluid temperature transducer, and the development of a method of bonding platinum transducers to the reflector assembly for wall temperature determination.

For measurement of medium-range temperatures, Chromel vs Alumel thermocouples will be used, particularly because their high radiation resistance has been well established.

For high-temperature measurement, the use of tungsten vs tungsten-26 Rhenium thermocouples is contemplated. Thermocouples of this type are being used by LASL, and they will be further developed as a part of the NERVA control system.

(4) Flow

Because the density of liquid hydrogen changes rapidly, volumetric flow measurement is inadequate. This problem will be solved by using volumetric turbine-type flow transducers with density compensation, or by the use of mass flowmeters now in development.

(5) Vibration

The problems concerning vibration transducers are as follows: The radiation resistant quartz crystal accelerometer is a high impedance device, thus making it susceptible to radiation caused insulation damage. The piezoelectric ceramic accelerometer has a high level output signal, but it is highly susceptible to radiation damage, and has not as yet been fully developed. For low-frequency applications, the electromagnetic vibration transducer poses no serious problems since it can be made radiation resistant by the use of ceramic insulated wire. At present, potentiometer-type accelerometers appear to be most suitable for low frequency measurements and strain-gauge types for high frequency applications.

(6) Connectors

Small size stainless steel connectors with ceramic-insulated pins are available for use in a high radiation environment. However, for the NERVA rocket engine, large, self-centering, radiation-resistant connectors must be developed.

(7) Cables

Mineral-insulated and vacuum dielectric cable with ceramic spacers is available for radiation environment. However, problems of moisture contamination, vibration environment, and interface connection, do exist. Most of these problems will be solved by proper potting and sealing techniques.

(8) Transducer Mounting

Transducers subjected to extreme heating will be installed so that they will be cooled by heat conduction through their mounting brackets to the cooler engine structure. Transducers that cannot be cooled by conduction to the structure, must be cooled by means of the component cooling system.

c. Status of Development

By the end of Phase I, a list of parameters to be measured during the NERVA engine test program will have been compiled. This list also established the time resolution and percentage amplitude resolution for each transducer and specifies for which of the following purposes the transducer is intended: (1) flight diagnosis, (2) flight-test checkout, (3) ground diagnosis, (4) facility-test checkout, (5) flight control, and (6) test control.

A general survey of all transducers required for NERVA instrumentation has been performed, and it has been concluded that in addition to the temperature and pressure transducers being developed as part of the control system, the development of the following three types of transducers is critically required for NERVA engine and component testing purposes:

(1) Radiation-resistant platinum resistance thermometers to measure LH_2 temperatures

(2) Radiation-resistant accelerometers to measure vibration of NERVA engine components

(3) Radiation-resistant strain gauges to measure NERVA stress of NERVA engine components.

Therefore, several of these transducers will be purchased and radiation-tested in the next program phase to ascertain if they can be used for NERVA engine testing.

In addition, a special cryogenic temperature transducer development program will be initiated to provide accurate LH_2 temperature measurement for pump testing.

d. Development Program

The development program for the NERVA Diagnostic Instrumentation System for the period January '62 - December '63 is divided into 7 specific major tasks. These tasks are described below, and are graphically depicted in Figure IV-C-2-1 and in the Program Planning Network, Figure IV-C-2-2 for Sub-task 2.4. The program for January through September of 1962 is described in the Technical Administrative Document Task Item 2.4 in Volume II.

(1) Task 1

The establishment of all the parameters that are to be measured in the first "E" engine tests will be continued through March 1962.

(2) Task 2

Preliminary specifications for the transducers to be used on the "E" engine will be written from January 1962 to September 1962. These specifications will indicate the range, accuracy, repeatability, linearity, frequency response, etc., required of each transducer. Wherever possible, the type, model, and vendor of each transducer will be specified.

From March 1962 to September 1962, a preliminary installation design of all the transducers and their associated cabling, harnessing, and disconnects will be performed. This design will be based upon the preliminary selection of transducers specified during this period.

(3) Task 3

The first phase of the proposed development program for the LH_2 temperature transducers will be initiated during January 1962; this phase will last six months. During this period, three types of transducers will be evaluated. These are: doped-germanium resistance elements; gas thermometry techniques, and platinum, indium, and indium alloy resistance elements.

IV Technical Discussion, C (cont.)

Recent experiments conducted at the National Bureau of Standards show interesting promise for the development of doped-germanium resistance thermometers for use in liquid hydrogen. The National Bureau of Standards has used germanium resistors in experiments designed to correct errors in the 1958 International Temperature Scale based upon the pressure volume relationship of helium. Resistors have been utilized which have 50 to 500-ohms change in resistance over the range of 2.2°K to 6°K with measurement repeatabilities of 0.0001°K and stability of the order of 0.00001°K per week in laboratory applications. Doped-germanium resistors are commercially available which provide resistance change of from 40 ohms to 10^7 ohms in the temperature range from 20°K to 40°K. The development plan proposes, as a first approach, the construction of 15 doped-germanium resistance thermometers and testing of these thermometers in the environment of rocket engine tests.

A second approach for accomplishment of this task will be the development of rugged vapor-pressure thermometers of the gas and liquid-gas varieties, to be employed in the rocket engine environment as a cross-check against the resistance thermometers. If a satisfactory vapor-pressure thermometer can be developed with the environmental quality required for engine testing, this could easily lead to the development of an NPSH gauge utilizing the vapor-pressure thermometer to stimulate one side of a differential pressure transducer against the reference pressure of a Pitot tube near the eye of the pump. Laboratory tests using this technique on a small laboratory pump have been conducted successfully at the National Bureau of Standards, Boulder, Colorado.

A third approach to this developmental problem would be to expand the scale and improve the calibration quality of currently used platinum resistance thermometers to increase their accuracy, and to evaluate indium and indium alloys as resistance units for use in this temperature region. The resistance vs temperature characteristics of pure indium over the temperature range of 3.4° to 300°K have been recently measured by reputable scientists. The resistance change with temperature in the region of interest is both linear and appreciable. Some problems have been encountered in extruding indium to a fine enough wire to provide adequate resistance. Recent developments of indium-tungsten alloys indicate the possibility that this wire could be a useful resistance element for LH_2 service, and that it would be adequately ductile for the fabrication of high resistance units.

Calibration methods must be developed in conjunction with the transducers for temperatures in the regions of 20°K, since the only current standard between the lowest primary fixed point on the thermometry

scale (the boiling point of liquid oxygen at 760 mm Hg) and the upper limit of the pressure-volume-temperature relation of helium (5.22°K) is a National Bureau of Standards calibrated platinum resistance thermometer. The laboratory accuracy of this thermometer near the boiling point of liquid hydrogen is 0.02°K.

A cryostat system, supplemented by apparatus to establish the boiling point of liquid hydrogen, and the triple-point and boiling point of neon, is proposed to improve the precision of calibration over the critical temperature range.

In conjunction with the above areas, work will be conducted on miniaturization of the sensing elements and on attachment of various types of elements to the surface of materials for wall temperature evaluation.

In August 1962, upon completion of the transducer evaluation at liquid hydrogen temperatures, one type of transducer will be procured for the simulator and component tests. Further evaluation of these transducers will be conducted in conjunction with the STE and component test programs in progress at that time.

(4) Task 4

As discussed previously, there are several transducers, in addition to those that are part of the NERVA control system, that are of a critical nature and require early development. These are the transducers that are required to measure LH_2 temperature and the vibration and stress of various NERVA engine components.

Two platinum resistance thermometers, one potentiometer-type accelerometer, and five weldable strain gauges will be procured from January 1962 to March 1962.

Radiation tests of these transducers will be planned and designed in the period April through June 1962; these tests will be performed between July and September 1962.

In addition to checking the radiation resistance of these transducers, particular attention will be paid to methods of achieving maximum reduction of noise in transmission lines leading from low level transducers such as thermocouples and strain gauges.

IV Technical Discussion, C (cont.)

(5) Task 5

It is of vital importance that all the components of the NERVA Diagnostic Instrumentation system be definitively specified so that their installation can be incorporated into the "E" engine design, since the test-stand data acquisition system must be designed to match and accept the signals from the various diagnostic transducers. Therefore, a test program will be initiated which will help decide which transducers should be used for the "E" engine.

In the period from October 1962 to January 1963, based upon the preliminary selection of Diagnostic Instrumentation Transducers for the first "E" engine, the following transducers will be purchased for non-radiation and irradiation testing: pressure transducers, temperature transducers, accelerometers, strain gauges, miscellaneous transducers, connectors, and sets of cables. Representative samples of these transducers will be tested in a non-radiation environment from December 1962 to May 1963.

Samples of those transducers that were found to be acceptable in the non-radiation tests will be irradiation tested in the CITS Program.

(6) Task 6

In the period December 1962 to March 1963, final detailed and definitive specifications for the first "E" engine Diagnostic Instrumentation system will be written.

Starting in January 1963 and continuing through April 1963, the final design of the installation of all transducers and their associated accessories such as cables, connectors, harnesses, etc., for the first "E" engine will be performed.

From March 1963 to July 1963, all the components of the Diagnostic Instrumentation system will be released.

So that subsequent "E" engines' test schedules can be met, and in order to maintain a sufficient quantity of diagnostic components for acceptance testing and repair, it is expected that three or four sets of systems will be procured through 1963.

The first "E" diagnostic instrumentation system components will be acceptance tested from July through October 1963. In the period October 1963 - December 1963, the Diagnostic Instrumentation system will be installed in the first "E" engine.

(7) Task 7

The diagnostic instrumentation system for the first 'E' engine will consist of many components that will not be flight-type hardware either because they are not radiation resistant, require too much cooling, or for other reasons. Therefore, the development of improved transducers and accessories will be continued and will utilize the Component Irradiation Test System (CITS). This development program will start in January 1963, with testing in CITS in June 1963. It is planned that the following transducers will be tested in CITS through 1963: pressure transducers, temperature transducers, accelerometers, strain gauges, miscellaneous transducers, connectors, and sets of cables.

Hardware schedules are shown in Figure IV-C-2-3; component test schedules are presented in Figure IV-B-1-6.

NERVA PROGRAM

DIAGNOSTIC INSTRUMENTATION

NERVA
Program Schedules
and
Milestones
11 January 1962 Through 1963

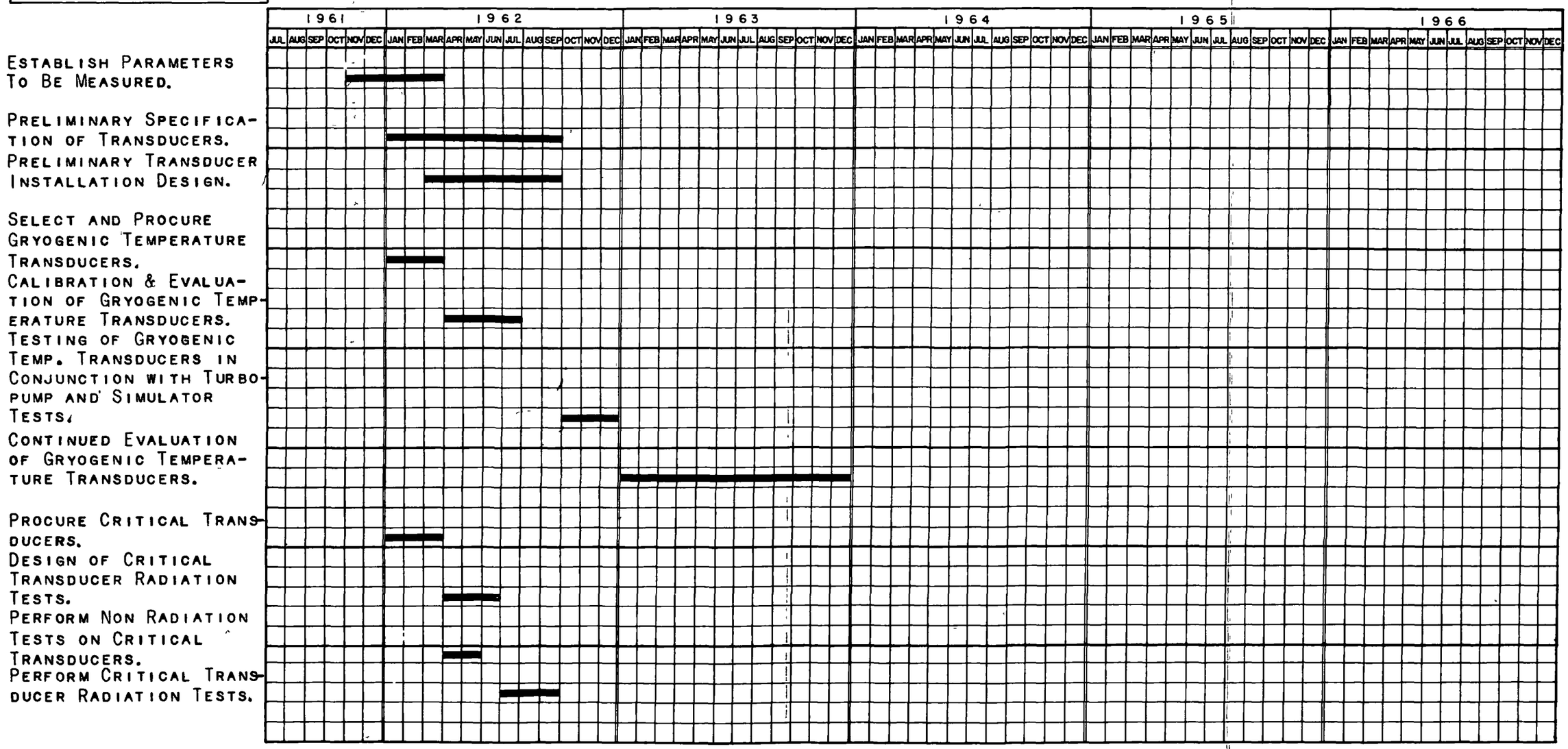

Fig. IV-C-2-1 (Sheet 1), Vol. I

NERVA PROGRAM

DIAGNOSTIC INSTRUMENTATION

NERVA
Program Schedules
and
Milestones
11 January 1962 Through 1963

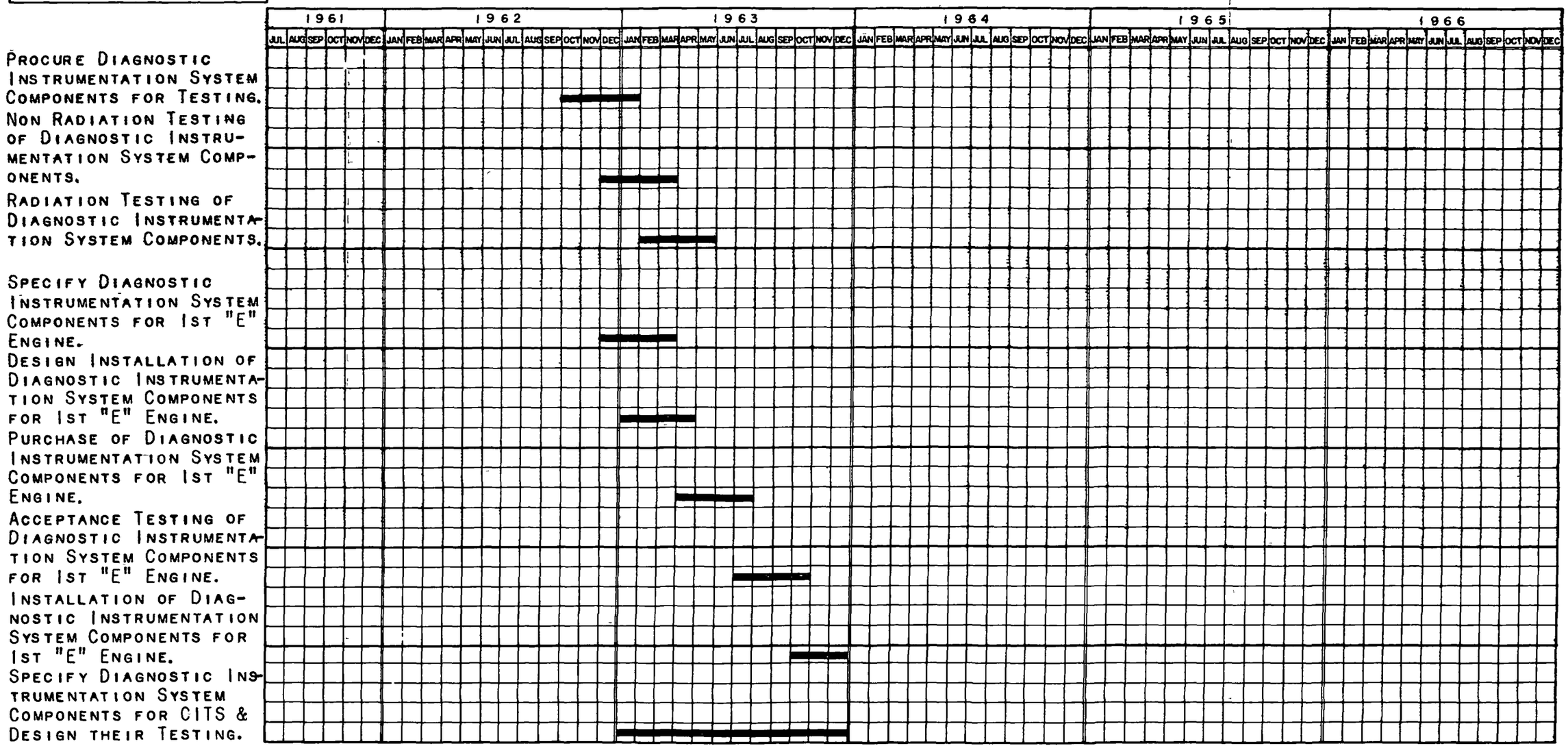

Fig. IV-C-2-1 (Sheet 2), Vol. I

NERVA PROGRAM

DIAGNOSTIC INSTRUMENTATION

NERVA
Program Schedules
and
Milestones
11 January 1962 Through 1963

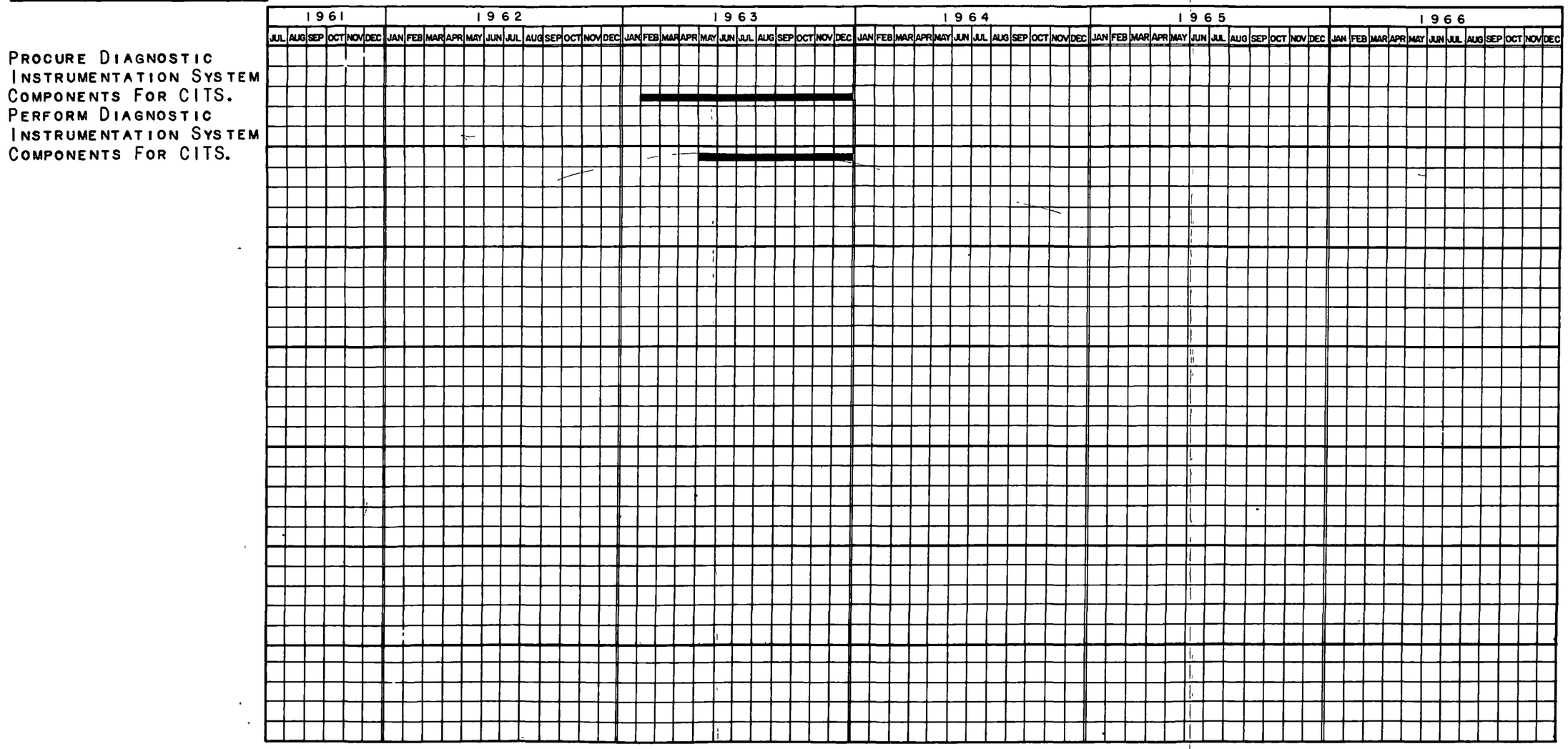

Fig. IV-C-2-1 (Sheet 3), Vol. I

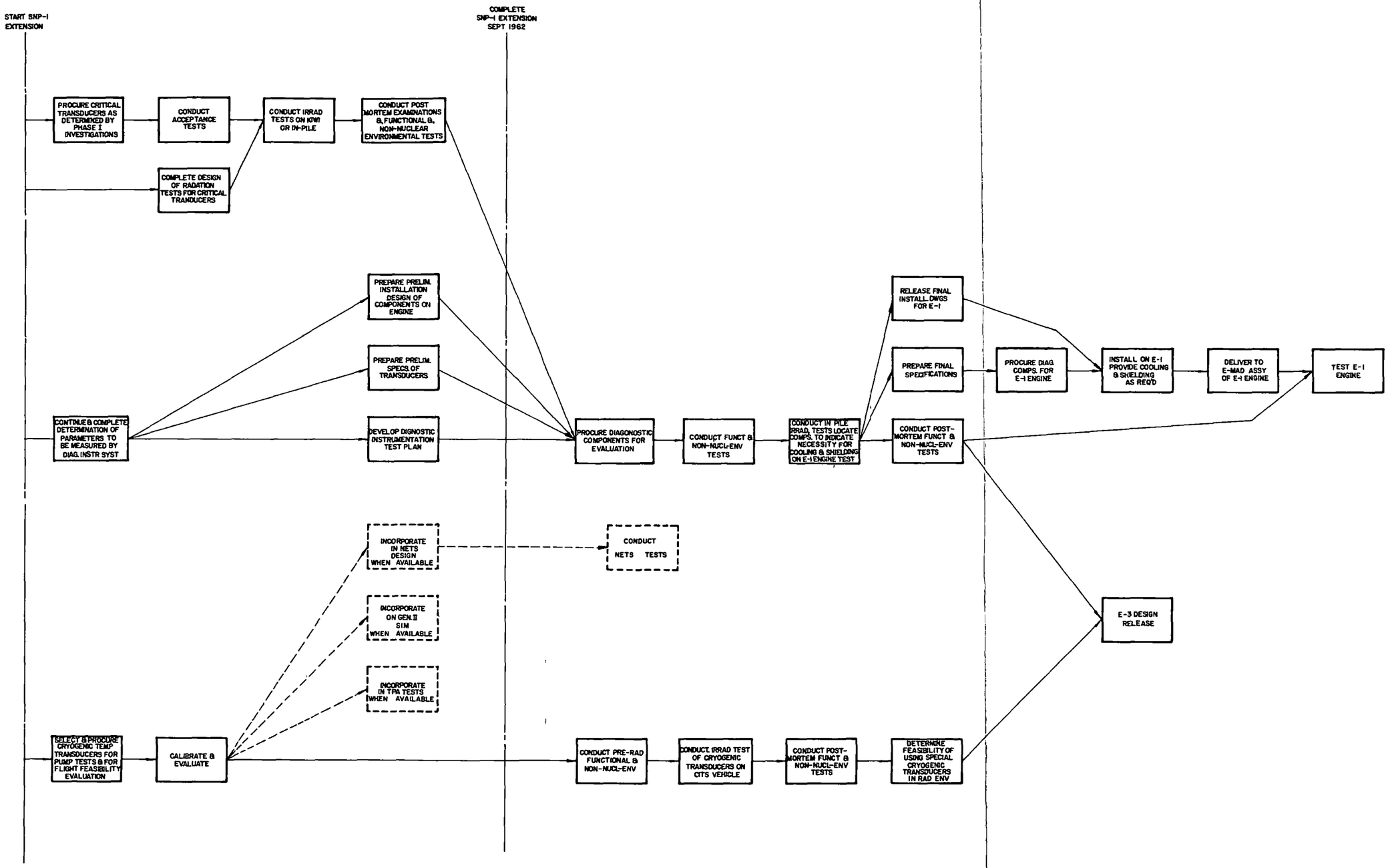

PROGRAM PLANNING NETWORK
SUB- TASK 2.4
DIAGNOSTIC INSTRUMENTATION

Fig. IV-C-2-2, Vol. I

COMPONENT/SUBASSEMBLY TEST SCHEDULE
DIAGNOSTIC INSTRUMENTATION (TASK ITEM 2.4)

Component or Subassembly	Config. No. or Series	Test Objective	Facility	No. of Tests 1962 J F M A M J J A S O N D	No. of Tests 1963 J F M A M J J A S O N D	Total
DIAGNOSTIC INSTRUMENTATION						
Doped Germanium Transducers	Experimental	Determine electrical resistance, temperature, sensitivity, and accuracy.	SRP Structures Lab	10 20 30		60
Vapor Pressure Thermometer	Experimental	Determine electrical resistance, temperature, sensitivity, and accuracy.	SRP Structures Lab	5 5		10
Indium and Indium Alloy Transducers	Experimental	Determine electrical resistance, temperature, sensitivity, and accuracy.	SRP Structures Lab	10 20 30		60
Miniaturized Transducers Elements Bonded to Aluminum	Experimental	Determine electrical resistance, temperature, sensitivity, and accuracy.	SRP Structures Lab	10 20 30		60
Simulator and Dump Temperature Transducer Installation	Experimental	NPSH and reflector gas phase determination.	SRP Structures Lab	4 4 4	4 4 4 4 4	32
NRX-1 Temperature Transducer Installation	Experimental	NPSH and reflector gas phase determination.	NTS		2 2 2	6
CITS Temperature Transducer Installation	Experimental	NPSH and reflector gas phase determination.			2 2 2	6

Fig. IV-C-2-3, Vol. I

IV Technical Discussion, C (cont.)

3. Field Support

In any rocket system a very significant amount of interaction occurs between the engine and the vehicle, in addition, the design of the overall system must be considered when the two components are being designed.

During Phase I, Marshall Space Flight Center (which has the responsibility of providing the vehicle for use with this engine) and four contractors whom they have selected to carry out preliminary investigations, were briefed on various aspects of the engine design. Installation drawings and anticipated performance data including possible start and shutdown transients were provided to these groups, and they have furnished us information concerning the vehicle, principally with regard to vehicle size and shape, and thrust vector control requirements. Anticipated vibration environment during the boost phase was also obtained, although this was somewhat of a crude estimate since the booster design to be used with this engine is not yet well established.

It is anticipated that a single RIFT (Reactor In-Flight Test) vehicle contractor will be selected early in Phase II of the NERVA program. As soon as this occurs, the coordination problem will be greatly simplified and closer liaison can be maintained with this contractor than was possible when there were several competing companies involved. The NERVA-RIFT Interface Committee will be involved in this activity (particularly during the early months of the Phase II program) to settle disagreements between the engine and vehicle contractors, and generally to assist in the integration of the two systems. Periodic meetings will be scheduled between the five groups involved (Aerojet, SNPO-C, Interface Committee, NVPO-MSFC, and RIFT contractor) to discuss the overall progress of the system design. The first meeting should be held within 30 days following the selection of the RIFT contractor. In the interim period Aerojet, SNPO-C NVPO, and the Interface Committee should continue discussions of the pros and cons associated with the various possible interfaces. Preliminary interface specifications can be established at these meetings, to be firmed up after the vehicle contract is awarded.

A resident engineer will be assigned to work with the vehicle contractor, once one is selected, it is anticipated that the vehicle contractor will want an engineer in residence at Aerojet. In this way, the effect on the engine or vehicle of any design changes, in the vehicle or engine respectively, can be immediately determined and appropriate design changes can be accomplished with a minimum of delay.

IV Technical Discussion, C (cont.)

A preliminary performance evaluation of the engine has been carried out during the Phase I program. Among the calculations completed was a determination of the probable thrust duration which might be obtained from thenuclear stage. These data are presented in Figure IV-C-3-1, for which the calculations were based on a modified version of the C-4 Saturn, with eight J-2 engines in the second stage. It was found that the optimum ratio of second-stage burning time to first-stage burning time was independent of the nuclear-stage burning time for an earth escape flight, and was approximately 2.22 under these conditions. As the nuclear-stage burning time was increased, the net payload increased rapidly until a burning time of approximately 1724 sec, after which a decrease in payload began to occur. With a nuclear stage burning time of 600 sec, the payload to escape was about 101,000 lb; at 1200 sec it was 132,000 lb, and at 1724 sec it was 144,500 lb.

When shifting to vehicles of other thrust levels, one would expect the thrust-duration ratios for the first two stages to hold approximately constant as long as the thrust-magnitude ratios remained constant. If the latter ratio varied, then one would expect a change toward the increase in duration of the stage having the higher thrust, but this would occur only if gravity losses on the lower-thrust weight-ratio stage were significant.

For smaller rockets, such as the C-3, the nuclear-stage weight will vary somewhat less than linearly with booster thrust level due to the increasing thrust-to-weight ratio of this stage. As a result, the nuclear stage may be started at a lower initial velocity and the ratio of nuclear-thrust duration to total chemical-thrust duration will hold approximately constant, and may even increase slightly. The complete results of this analysis are not yet available and will be presented at a later date.

The effect of changes in specific impulse and thrust level was also approximately computed. These data are presented in Figure IV-C-3-2. A strong dependence on specific impulse was seen, while a small but still significant effect was produced by changes in thrust level. These vehicles were at near-orbital speed when the nuclear stage was started. A stronger thrust-level effect would be produced if startup occurred at significantly lower speeds (1500 to 1800 ft/sec) such as might occur with the C-2 or C-3 boosters.

This evaluation was carried out, based on the best available data on probable booster and RIFT vehicle configurations. Since these vehicles are not yet well established, and since the design and performance of the booster will affect the design and performance of the nuclear stage, these data must be continuously upgraded as the configurations become better defined.

Potential uses of the NERVA engine include surface-to-orbit, orbit-to-orbit, earth-to-moon, and deep-space flights. The effect of various changes in the design of the engine on the net payload of the vehicle involved for each mission should be considered in arriving at the decision to make the change. These studies will be carried out in conjunction with the RIFT vehicle contractor.

Aerojet will provide assistance to the RIFT contractor in planning the vehicle static test program. This will ensure the availability of test engines as required by the vehicle contractor, and will assure the vehicle contractor that he is properly considering the engine aspects of the vehicle test program. Current planning in the engine development program is based on the assumption that the engine will be fully instrumented during all vehicle static tests, so that these tests can be considered as engine tests as well as vehicle tests.

DEPENDENCY OF PAYLOAD ON THIRD STAGE BURNING TIME

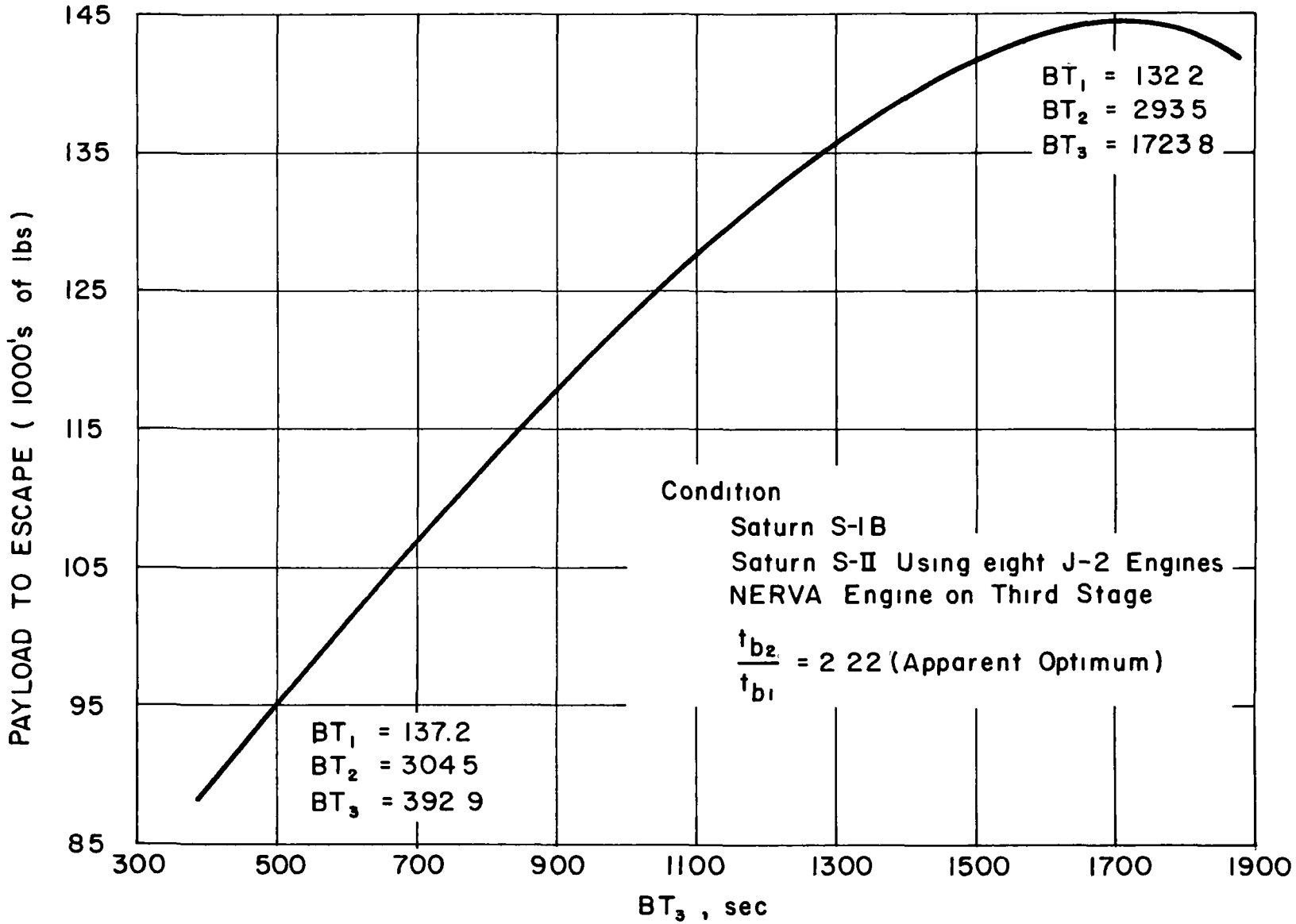

Fig. IV-C-3-1, Vol. I

AGC 5208

EFFECT OF THRUST LEVEL AND SPECIFIC IMPULSE OF NERVA ENGINE ON PAYLOAD TO ESCAPE

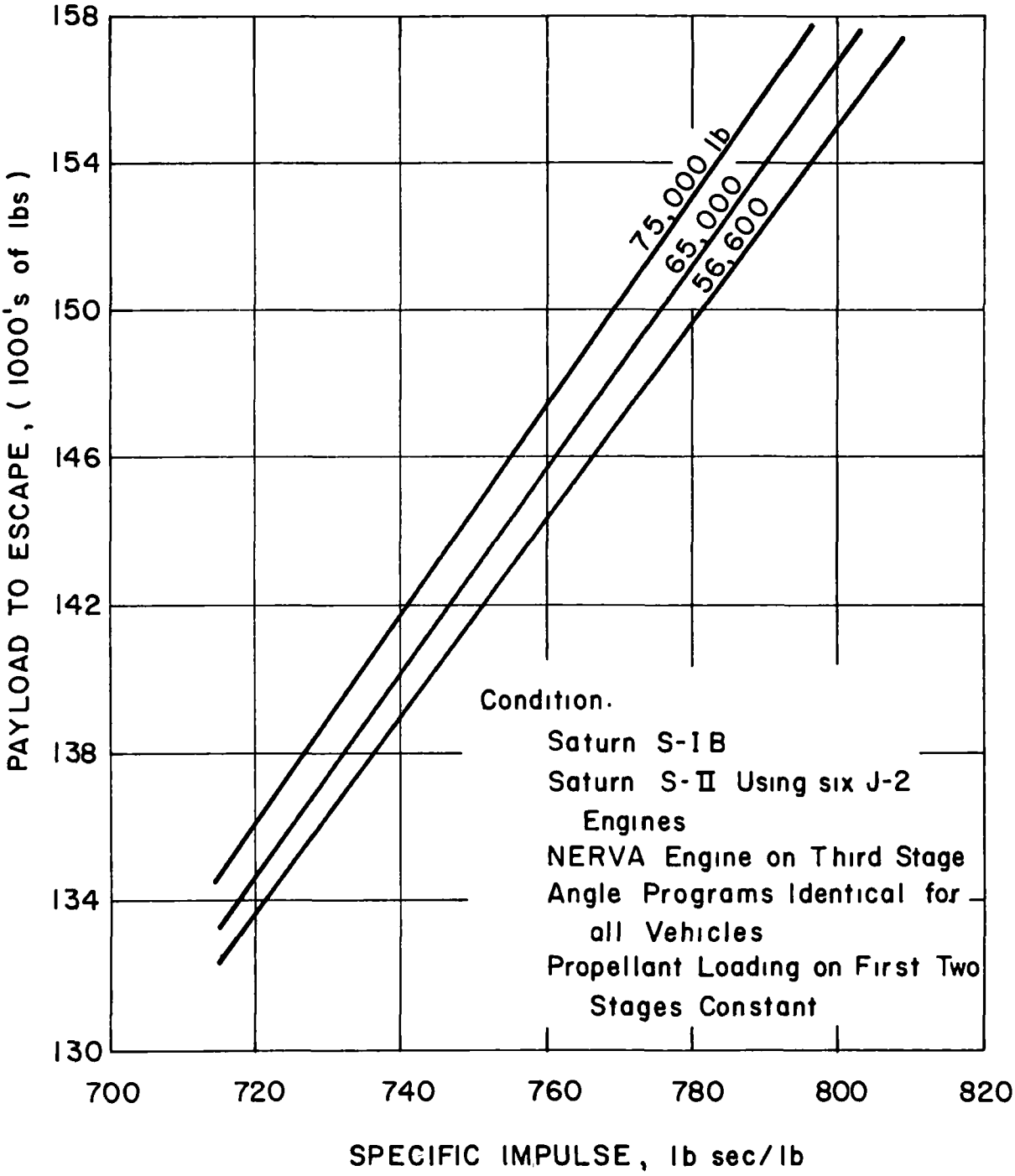

Fig. IV-C-3-2, Vol. I

4. Reliability and Quality-Control Program

a. General Discussion

The NERVA reliability program will provide data, technical guidance, and statistical assessment for the development of a reliable engine design. It will also provide the monitoring functions required to assure that design expectations are fulfilled in the delivered flight engine. Special consideration will be given to the determination of the effects of radiation on the components and the subsystems of the engine. In addition, due to the radiation hazard, special consideration will be given to provide adequate safety features.

The concept of "absolute" design reliability will be used as a goal. The engine complexity requires that many of the components have failure rates of 1 in 10,000 or less in order to obtain the high reliability desired for the NERVA engine. The new and more extreme environmental and operating conditions to be met by these components will necessitate the use of such measures as safety margins, derating, redundancy, internally controlled environments, and the mismatching of equipment sensitivities with service stress.

b. Functions

(1) Apportionment

The reliability goal of 81% is being used as a basis for the reliability apportionment of the engine during Phase I. Preliminary apportioned reliability goals as made for the initial proposal, are being reviewed and revised. Revisions will be made as required during the new program period. The engine is being apportioned with the use of complexity weighting factors, which are numerical values intended to include, but not to be limited to, the following items: number of parts in each component, number and degree of difficulty of manufacturing operations, number and type of modes-of-failure and anticipated degree of difficulty in correcting them, failure history of the item or similar items, internal and external environments.

Following analysis of the above considerations, a complexity weighting factor will be assigned to each component. The complexity factors of the subsystems will then be found by adding the complexity factors of the components within the subsystem. Similarly, the complexity factors of the systems are the sum of the complexity factors of their subsystems,

and the engine's complexity factor is the sum of its systems' complexity factors. The apportioned reliability of a component can then be found by

$$R_{component} = R_{engine}^{\frac{C}{E}}$$

where:

R_{engine} = reliability goal for the engine

C = complexity factor for the component

E = complexity factor for the engine

The apportioned goals for the subsystems and systems are found by the same method. Figure IV-C-4-1 is a preliminary functional block diagram for apportionment.

The initially developed complexity weighting factors and goals provide the best estimates for the inception of the development program. The complexity factors are presently being recalculated as the stages of development advance.

(2) Design Review

Design review will be conducted between the reliability engineer and the designer. This review will consider the possible modes-of-failure, the probability of occurrence, the cause of each mode-of-failure, the effect of the failure on the system, the consequence on the mission, the corrective action necessary to eliminate the failure, and trade-off considerations. A sample of the modes-of-failure for one component is shown in Figure IV-C-4-2. This list of failure modes is made possible by an analysis of the design, in which listings of the measurable performance characteristics, the environmental influence factors, and the design information for evaluation of failures were made, as illustrated by Tables IV-C-4-1, -2, and -3, respectively.

A check list including the following items will be prepared for use during design review:

(a) Performance requirements - considering the design's ability to meet performance requirements.

IV Technical Discussion, C (cont.)

(b) Environmental requirements - considering the effects of the environments and combinations of the environments on the design.

(c) Material selection - considering the effects of the various factors, particularly radiation, on the material to be used, and reviewing material callouts and the controlling specifications to assure applicability and adequacy.

(d) Assembly operations - considering the effects of interaction with other components in the system in regard to fit and functional operations.

(e) Redundancy - considering the increase in reliability by redundancy versus space, weight, and complexity.

(f) Derating and safety margins - considering the achievement of higher reliability and longer life through derating and safety margins.

(g) Reliability-performance trade-off - considering the balance of reliability versus performance to achieve an optimum overall result.

(h) Human factors - considering the ease of assembly, installation, operation, and maintenance, and also the possibility of human error during these phases.

(i) Standardization of parts - considering the use of standardized parts when it is possible to obtain such with the required quality and reliability.

(j) Simplification of parts - considering the increase in reliability through simplification of design.

(k) State of the art - considering the design in comparison with the present state of the art.

(l) Fabrication and value engineering - considering the fabrication of the design and the cost to fabricate.

(m) Special processes - considering their adaptability to necessary quality control measures.

(n) Tolerance build-up - considering the build-up of tolerances in the piece and in its assembly.

(3) Failure-Reporting System

The failure-reporting system to be used will indicate the mode-of-failure, the cause-of-failure, and the condition under which the failure occurred. The failure report will initiate a failure analysis which will lead to corrective action. In this way each part and its design will be continuously monitored for reliability problems. The major phases of a failure reporting system are· data gathering, data processing, evaluation, feedback, and follow-up. Each of these steps is an essential part of the overall system. The following descriptions outline what are considered to be the best practices and techniques as they apply to each individual step.

(a) Data Gathering

One of the most important sources of information that can be used to evaluate system and component reliability and provide a basis for taking corrective action is the failure data generated during test programs. The failure data generated during the testing program is recorded on reliability test and failure report form.

(b) Data Processing

Each failure report is checked for completeness and to determine if an immediate special individual investigation is warranted.

(c) Evaluation

Each failure report is given individual evaluation to determine if the report deals with a failure that is sufficiently critical to warrant immediate action. Continuous evaluation is applied to the failure reports to spot trouble areas that become apparent due to a trend or a large number of one particular type of failure. Since a failure may indicate a potential weakness in the production design, each failure is thoroughly investigated to ascertain whether the failure is attributable to an assignable cause (design weakness, improper application, or poor workmanship).

(d) Feedback

Having determined through evaluation that either a single failure or a series of failures have occurred on a particular component, corrective action is taken.

(e) Followup

A periodic check will be made to determine if the action taken by the responsible groups was actually effective. The results of followup are documented and cross indexed to show that the action has been closed out.

(4) Test-Plan and Test-Result Review

In assessing reliability, maximum utilization shall be made of information available from all development tests, including the Component Irradiation Test System tests where radiation effects will be studied. The reliability information to be extracted from the test plans and results will include determination as to whether the test can be classified as a success or a failure for reliability assessment, and whether it presents data which can be used for estimating the parameters of reliability density functions.

(5) Statistical Assistance

Through statistical design of experiments and statistical analysis of data, assistance will be provided to engineering groups to aid them in planning tests and analyzing the data to obtain maximum usefulness of the test.

c. Status of Reliability and Quality Assurance

(1) Failure-Mode Analysis

A failure-mode analysis of the Kiwi-B1A reactor has been completed.

Failure mode analyses, and the corrective actions devised, are essentially completed for the control-drum actuator. Comparative reliability analyses were made of one-piece and segmented beryllium reflectors.

Design criteria sheets and modes-of-failure analyses have been completed for eight major components in the heated bleed engine.

(2) Apportionment and Assessment of Reliability

Work on assessment and apportionment of the heated-bleed engine reliability is proceeding. Revision, to agree with the

directive establishing turbine exhaust lines and roll control nozzle assemblies, will be necessary, and further consideration will be necessary before optimum breakdown of reliability apportionment is achieved. The optimum breakdown will help reduce the amount of subsystem testing needed to demonstrate reliability by minimizing interaction effects between components.

A functional block diagram of the NERVA engine (heated-bleed cycle) has been completed and will be used for reliability apportionment.

The study and coordination required to establish methods for assessing the engine component reliabilities is in progress.

The study and coordination required to establish methods for assessing the engine component reliabilities is in process.

The definition of successful performance to be used for reliability assessment is being determined in conjunction with the cognizant design engineer.

A preliminary reliability apportionment of the major divisions of the reactor assembly and the related control elements has been completed.

The components of the actuator were assigned preliminary reliability goals to permit analyses of critical parts and components and to derive life characteristics.

(3) Statistical Planning and Evaluation of Tests

Assistance in the statistical planning of a test program to evaluate the properties of graphite was rendered. Results will be of use in analyzing the reliability of reactor design.

Reports of the results of statistical evaluation of test plans for the turbine power control valve, the tank shutoff valve, and the seals development program, were completed.

A design of experiments was completed for the thrust-chamber pressure transducer. This defines the test plan for selecting the most suitable transducer.

(4) Data Center

A preliminary report describing the requirements and processes for the data center was completed. Further consideration of the scope of the project will precede detailing the mechanics of this operation.

(5) Methods and Procedures

Rough drafts have been completed for the following procedures: complexity indexes for reliability apportionment, reliability apportionment model for the NERVA engine, and reliability growth curve for the NERVA flight engine and its system and components.

(6) Criteria

Preliminary reliability and quality assurance criteria have been written for the instrumentation and controls design criteria handbook.

d. Quality Assurance

The purpose of this section is to describe the quality assurance system presently in use at all Aerojet-General Plants, and its application to the follow-on of the NERVA Program. Experience has proved that this system is effective in guaranteeing the quality and reliability of Aerojet products.

(1) System Controls in Design Phase

During the development phases of a program, Aerojet drawings, including all interfaces, are reviewed to assure that a quality product will result. This review is performed by quality engineers experienced in the design of engine components and specialists in non-destructive testing, functional testing, and special processes.

Quality engineers work directly with design engineers throughout the life of a project, assuring the correctness and clarity of all requirements associated with the achievement of quality. Specifications and drawings are reviewed and input is provided on acceptance criteria, testing and inspection requirements, special process controls, specification callouts, and the use of equipment and tooling. Suggestions are made regarding control of product identification, serialization, and marking requirements on the drawings, as these become the basis of controlling all product data files.

IV Technical Discussion, C (cont.)

Continuous liaison is provided between design engineering and quality control to insure prompt attention by both groups to actual and potential quality problems.

Quality engineers are assigned to assist with the qualification of products and design. Quality engineering maintains a continuous program for the periodic requalification of subcontractor supplied products to guarantee that there is no change in the quality as originally approved.

Quality engineers will be assigned to review all drawings for NERVA engines and to check the quality aspects of the design, the drawings, and the specifications, and to sign off drawings prior to release. This effort will continue through the life of the program and will cover both new designs and changes in design so that quality characteristics will be incorporated into engines to meet the high reliability standards that are an inherent necessity in this nuclear project. Drawing review during the present contract is by request of design engineering, and to a level deemed necessary for the limited hardware tests.

(2) Tools, Gages, and Test Equipment

Aerojet operates a primary standards laboratory for the calibration of gages and test equipment. This laboratory is a part of the system developed under the Naval Ordnance Standards Laboratory at Pomona, California, and gives a direct tieback of the accuracy of Aerojet gages and instrumentation to the National Bureau of Standards. The Primary Standards Laboratory is equipped with master gages and primary standards that cover the field of inspection measurements and electronic and pressure testing devices. Through use of these standards, the secondary standards used throughout the plant are calibrated.

Secondary standards laboratories operating to the established levels of accuracy, are located through all AGC Plants and have the responsibility for day-by-day calibration of working equipment and gages. The frequency of recalibration is pre-established and each piece of equipment is tagged with the date calibrated and the date it is due for recalibration. The engine system is policed by the quality control organization.

The tool, gage, and test equipment system at Aerojet has been designed to provide measurements at the highest level of accuracy possible with modern inspection and testing devices.

(3) Control of Raw Materials

When raw material is first received at Aerojet, its chemical and physical properties are checked. If these are satisfactory, the material is positively identified both by type and by the specification to which it conforms. This identification is normally in the form of strip marking that permits the material to be cut without losing its identity.

At the time of issue the inspector checks the identification of the raw material against the specified requirements shown on the planning, and only permits material identified to the specification called out on the drawing to be used. Raw material not used in the shop can be returned to stock only if it carries its original identification, if not, samples are sent to the laboratory and the material is reidentified on a basis of the laboratory findings.

(4) Inspection Planning

All inspection operations are planned to assure complete and accurate inspection of all significant characteristics. The inspection planner reviews both design and production drawings and specifications and establishes check points that must be covered by the inspector. Inspection planning is coordinated with fabrication planning to assure that hardware flows through the check points at the time that inspection can be performed most effectively.

Inspection instructions issued to floor inspectors list the characteristics to be inspected and indicate the inspection method and equipment to be used. The planning is used both as a check-off sheet and guideline, and as the medium for recording actual inspection dimensional findings for design and fabrication process analysis.

Inspection planning for the NERVA Project is being prepared in advance of hardware production. Planning is provided for all parts and assemblies, and for all modifications, changes, and reworks of parts and assemblies during the fabrication of NERVA hardware.

(5) Systems Control, Subcontracted Hardware

(a) Pre-award Evaluation

Engineers from the surveillance group of quality engineering are assigned to survey teams for pre-award evaluation of

prospective vendors. This operation is vital to the selection of component vendors and is applied across the board to the procurement of machine parts, assemblies, raw materials, castings, and forgings. An analysis is made of financial stability, administrative and manufacturing capability, and the quality-control system of the vendor. The following points are important to the control of quality: the ability of the supplier to work within the requirements of the government procurement system, the capability of the vendor in terms of equipment and personnel to adequately inspect hardware prior to shipment, and the presence of a quality-control system that provides satisfactory control of tools and gages, records, planning, drawing changes, stores, and shipping.

Based on this survey, quality control approves or withholds approval for the adding of the vendor to the Aerojet suppliers' list.

(b) Approval of Subcontractors' Special Processes

Quality engineers review subcontractors' special processes and nondestructive testing facilities for conformance to appropriate military and Aerojet specifications. After careful examination at the vendor's plant, using standard techniques for certification, they approve special processes, nondestructive testing facilities, personnel, and equipment for use on Aerojet contracts. At established intervals, resurveys are conducted to insure that quality is being maintained. The approval process is also extended to second tier subcontractors.

(c) Review of Subcontracts

Purchase orders are screened by inspection planners before release to the supplier. Quality requirements needed for adequate control of quality at the vendor's plant and objective evidence required with material on receipt at Aerojet are incorporated into the purchase order.

Inspection Planning documents are supplied to vendors awarded purchase orders for items bought in significant quantities, or for items that are critical to operational reliability. These planning documents include a list of characteristics, the classifications of the characteristics, the method of inspection, and other significant quality data that may apply.

(d) Source Acceptance

The Inspection Department maintains a staff of trained personnel in the field to provide quality control at suppliers' installations. Source personnel work in close liaison with quality engineering to insure that the vendor is complying with his approved procedures and processes. Unnecessary delays in the program are avoided by the source acceptance of material at the vendor's plant. The degree of acceptance at the vendor's plant is governed by his past history as an Aerojet supplier, as well as by a thorough knowledge of the vendor's own inspection capability. The Aerojet source acceptance program does not relieve the vendor of performing his own inspection functions.

(e) Inspection of Subcontracted Supplies

Receiving inspection determines the conformance of incoming material to purchase contracts, drawings, specifications, and inspection planning. Inspection results, both drawing conformance and exact measurements, are recorded and used to provide the design engineer with detailed information. Raw materials are tested for physical and chemical characteristics and identified to avoid any possibility of misuse. Items requiring functional test are referred to the appropriate AGC laboratory and accepted on the basis of the laboratory results. Receiving inspection operations complement any source acceptance performed at any subcontractor's plant. Vendor's inspection results are recorded on Aerojet planning and forwarded to receiving inspection for comparison, validation, and acceptance, after the supplier's quality control capabilities have been established.

(f) Subcontractor Assistance

Quality engineering will assume the responsibility for assisting subcontractors during the early phase of their programs. They will study the subcontractor's quality problems, anticipate points in which reliability might be affected by his production, processing, and inspection methods, and obtain correction of difficulties at the start of his program. To reduce the time involved in vendor learning curves, quality engineers will assist in developing an orderly flow of hardware.

(6) System Control of Fabrication

(a) In-Process Inspection

Inspection planning, in conjunction with fabrication planning, selects check points where in-process inspection is

necessary to guarantee the quality of the final part. This includes first-article checks to prove that tooling will produce hardware conforming to drawings and specifications. It includes measurement of parts before special processing to guarantee that the tolerance of the unfinished part is sufficient to allow for any change in dimension during process.

During assembly operations inspectors observe and check that only acceptable parts of the correct configuration are used. As the assembly progresses, an inspector checks each operation and uses a standard report system to require correction of errors.

(b) Final Inspection

Detailed inspection planning specifies each point of final inspection. After the inspector has checked each of these points, he withholds acceptance until all discrepancies have been corrected. If variations are found that cannot be corrected he arranges for their review in accordance with nonconforming hardware procedures.

(c) Special Processes and Contamination

Special processes are controlled to procedures that have been approved by Quality Engineering. Solutions and materials are tested at frequent intervals throughout the day and tests that do not show conformance to approved standards are placed out of control until they are corrected. Control charts are maintained for each special process and quality engineers review these charts frequently, and arrange for changes to the process when necessary.

Welders are certified by Quality Engineering and the customer. Cleaning of critical parts is performed in a closed dust free area under constant quality surveillance. Parts are placed in sealed packages before release to Stores.

Additional control of special processes is maintained by Inspection after processing. Plating thicknesses, corrosion, resistance, and cleanliness are checked, using the best available equipment and techniques with periodic laboratory tests made of actual parts.

(d) Nondestructive Testing

Quality Engineering is responsible for techniques and inspection standards for nondestructive testing. The best

available equipment and processes for X-ray, ultrasonic, penetrant, and magnetic inspection are operated by trained personnel certified by Quality Engineering.

The hydraulic laboratories are equipped to perform pressure testing, flow testing, proof and leak testing, and functional testing of components from the smallest size up to complete engines. Special tooling approved by Inspection is used to develop setups in accordance with test specifications. Test procedures are checked by inspection planning to insure that they cover all requirements of the test procedures and Inspection checks the accuracy of gages and condition of tooling prior to each test. During testing, Inspection witnesses each step of the test, assures that all items on the test planning are implemented and records the inspection findings.

Operations in the electrical testing laboratories follow the same procedure described for the hydraulic laboratories.

(7) In-Plant Testing

In-plant testing of major components and completed engines is performed under the surveillance of the Inspection Department. Inspectors witness the installation of the assembly into the test stand, records discrepancies, and require correction prior to testing.

Test planning sheets reviewed by Inspection Planning establish the points throughout the test that must be checked to assure that procedural and specification requirements are met. Variations are subject to review by Quality Engineering, Project Engineering, and the customer.

The calibration status of test instrumentation is checked prior to test. Instrumentation malfunctions or equipment malfunctions that result in loss of parameters or in damage to hardware are investigated by Quality Engineering and corrective action is worked out with the Test Division.

After test, engines are inspected to insure that they are properly disassembled, cleaned and re-assembled, and that closures or other protective devices are installed to prevent contamination. Raw and reduced test data are reviewed and approved by Test Area Inspection. Records of tests are maintained in the test area. Reduced data is forwarded to Quality Assurance to be accumulated with other objective evidence to be presented to the customer at the time of acceptance.

(8) Packaging and Shipping

After final acceptance, Inspection assures that the product reaches the customer in perfect condition. Final cleaning, unit packaging, intermediate packaging and exterior packing are accomplished in accordance with written instructions that are approved by Inspection Planning.

The cleaning, packaging and packing plan is documented on a planning card which is checked off by Inspection during the shipping process.

(9) Facilities and Equipment

The Inspection Department is completely equipped with all standard types of gaging and tools. These include major inspection devices selected particularly for their applicability to rocket engine problems and ample supplies of small gages.

Basic equipment in each inspection area has been selected to meet the requirements of the inspections to be performed and include rotary tables, surface plates, comparators and hardness testers.

In the nondestructive testing field, Aerojet has facilities for every type of inspection anticipated to be necessary to guarantee the conformance of NERVA engine parts to specified requirements.

8500:197 DESIGN INFORMATION LIST FOR PERFORMANCE CHARACTERISTICS

DESIGN CHANGE												NAME		PART NO.
S/N EFFECTIVITY														
COGNIZANT ENGINEER											COMPONENT	ROLL CONTROL BEARING SUB-ASSY		6.3.4.6.2
DATE														
RELIABILITY ENGINEER											SUBSYSTEM	ROLL CONTROL ASSEMBLY		6.3.4.6.0
DATE											SYSTEM	NERVA ENGINE (HEATED BLEED)		6.3.0.0.0

ITEM NO.	MEASURABLE PERFORMANCES CHARACTERISTIC	UNIT	FAILURE LIMITS		DESIGN SPECIFICATION VALUES		
			LOWER	UPPER	MINIMUM	DESIRED	MAXIMUM
	THRUST	LB			1330	-	-
	PROPELLANT - FLOW RATE	LB/SEC			3.5	4.0	6.0
	PROPELLANT - TEMPERATURE	°R			875	-	900
	PROPELLANT - PRESSURE	PSIA			45	50	55
	PROPELLANT - LEAKAGE	LB/SEC			-	0	0.02
	LIFE (INTERMITTANT CYCLES)	HRS			2	-	-
	FRICTION AND INERTIA LOSS (HOT)	HP			0	-	1
	ANGULAR ACCELERATION	RAD/SEC^2			0	-	100
	ANGULAR VELOCITY	DEG/SEC			45	-	-
	VECTOR ACCURACY	DEG			-5	-	+5

3500:196 ENVIRONMENTAL INFLUENCE FACTORS

SYSTEM NERVA ENGINE (HEATED BLEED)
SUBSYSTEM: ROLL CONTROL ASSEMBLY

COMPONENT: ROLL CONTROL BEARING SUBASSEMBLY
PART NUMBER: 6.3.4.6.2

ENVIRONMENT		PREFLIGHT OPERATIONAL PHASE				FLIGHT OPERATIONAL PHASE					
		TRANSPORTATION AND	STORAGE COMMENTS	CHECKOUT		1st STAGE BOOST		2nd STAGE BOOST		NERVA OPERATION	
				APPLIED	INDUCED	APPLIED	INDUCED	APPLIED	INDUCED	APPLIED	INDUCED
TEMPERATURE °R	Min.			460	850	380	-	360	-	260	850
	Max.			590	950	620	-	540	-	760	950
PRESSURE	Min.			28.0"HG	-	10^{-1}"HG	-	10^{-4}"HG	-	10^{-9}"HG	10^{-9}"HG
	Max.			32.0"HG	-	32 "HG	-	10^{-1}"HG	-	10^{-4} "HG	55 psia
VIBRATION g's	Min.			-	-	-	-	-	-	-	-
	Max.				-		-		-	-	10 long 5 lat
ACCELERATION g's	Min.			-	-	0	-	0	-	0	0
	Max.			-	-	1 lat 8 Long	-	1 Lat 8 Long	-	-	1 lat 2 long
RADIATION	Min.	Fast Neutron:	Maximum Flux:	1.5×10^{13} /cm^{2}sec							
	Max.	Gamma:	Maximum Flux:	10^{13} rad/sec							
ACOUSTIC NOISE db	Min.			-	-	-	-	-	-	-	-
	Max.			-	45	135	-	-	-	-	100
SHOCK g's	Min.			-	-	0	-	0	-	-	0
	Max.			-	-	20	-	20	-	-	5
HUMIDITY %	Min.			-	-	-	-	-	-	-	-
	Max.			100	-	-	-	-	-	-	-
RADIATION HEATING BTU/in^3-sec		Steel		-	-	-	-	-	-	-	0.0438
		Aluminum		-	-	-	-	-	-	-	0.0124

Table IV-C-4-2, Vol. I

8500:195

DESIGN INFORMATION FOR EVALUATION OF FAILURES DUE TO ENVIRONMENTS

SYSTEM: NERVA ENGINE (HEATED BLEED)
SUBSYSTEM: ROLL CONTROL ASSEMBLY

COMPONENT: ROLL CONTROL BEARING SUB-ASSY
PART NUMBER 6.3.4.6.2

VARIABLE RESPONSE	ENVIRONMENT	MAX. EXP. LEVEL OF ENVIRONMENT	EXP. LEVEL OF ENVIRONMENT AT WHICH PROBABILITY OF FAILURE = 0.50
ANGULAR ACCELERATION	1. TEMPERATURE 2. PRESSURE	950 R 55 PSIA	1100 R 120 PSIA
ANGULAR VELOCITY	1. TEMPERATURE 2. PRESSURE	950 R 55 PSIA	1100 R 120 PSIA
FRICTION TORQUE	1. TEMPERATURE 2. PRESSURE	950 R 55 PSIA	1100 R 120 PSIA
EXCESSIVE LEAKAGE	1. TEMPERATURE 2. PRESSURE	950 R 55 PSIA	1650 R 70 PSIA
STRUCTURAL INTEGRITY	1. TEMPERATURE 2. PRESSURE 3. VIBRATION 4. ACCELERATION LAT. LONG 5. SHOCK	950 R 55 PSIA 10 g's long 5 g's lat 1 g 8 g's 20 g's	1400 R 120 PSIA 50 g's Long 25 g's Lat. 12 g's 20 g's 40 g's

Table IV-C-4-3, Vol. I

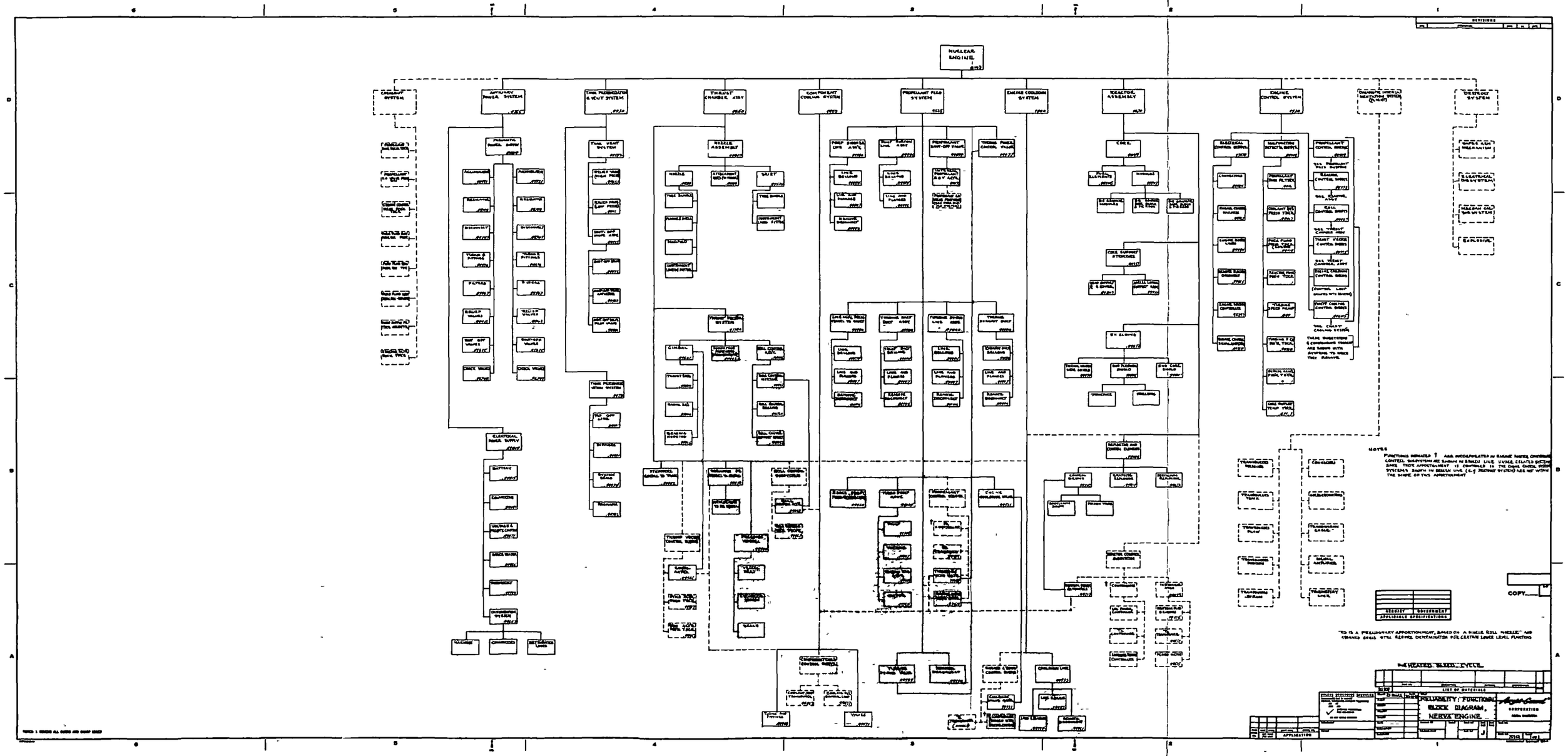

Fig. IV-C-4-1, Vol. I

MODES OF FAILURE ANALYSIS

PART NAME ROLL CONTROL BEARING SUB-ASSEMBLY
NEXT ASSEMBLY NAME ROLL CONTROL ASSEMBLY
MAJOR ASSEMBLY NAME NERVA ENGINE (HEATED BLEED)

PART NUMBER 6.3.4.6.2
NEXT ASSEMBLY PART NUMBER 6.3.4.6.0
MAJOR ASSEMBLY PART NO. 6.3.0.0.0

FUNCTIONAL AND ENVIRONMENTAL DESCRIPTION OF PART
PROVIDES SWIVELED BEARING AND SEALING FOR ROLL CONTROL ACTUATION.

MODE OF FAILURE	CAUSE OF FAILURE	EFFECTS ON SYSTEM	CODE I	CODE II	CORRECTIVE ACTION / DESIGN CHANGE	TRADE OFF CONSIDERATION / REASON FOR DESIGN CHANGE	REMARKS
A. Flange Leakage	1. Incorrect Gasket Sealing Force 2. Warped Flange 3. Deteriorated Gasket	Partial loss of roll control thrust	B	D	1. Establish proper torque values 2. a. Dimensional change b. Heat treatment between machining operations 3. Verify correct choice of material by test	b. Increased cost and production time	Substitute present roll control bearing (which requires sliding seal) with a flexible duct consisting of bellows.
B_1. Primary Seal Leakage	1. Bellows weld improper or incomplete 2. Bellows take permanent set due to high temperature 3. Excessive carbon wear 4. Carbon seal running surface roughness	Severe leakage may cause failure of bearings due to exposure to hot exhaust gases. This increases the required actuating torque which could result in loss of roll control and ultimate distruction of the missile.	A	C	1. Quality Control action 2. Protect from heat or make more heat resistant 3. Different material or increase bearing surface 4. Quality Control action	3. Requires higher bellows spring rate, which may result in no improvement in wearing qualities	
B_2. Secondary Seal Leakage	1. Seal warps 2. Seal breaks 3. Vent plugs up				1. New material/heat treat 2. New material/heat treat 3. Quality Control action		
C. Bearing Binds (Excessive friction torque)	1. Ball pile-up or separator growth jams bearing 2. Corroded or rough balls and races from excessive leakage 3. Overheat from heat shield failure or inadequacy 4. Scored or scratched by foreign material 5. Loose inner or outer race bolts 6. Cracked inner or outer race	Excessive bearing actuation torque which could result in loss of roll control and ultimate distruction of missile	A	C	1. New bearing separator configuration 2. Quality Control action 3. New heat shield configuration and/or material 4. Quality Control action 5. Quality Control action 6. a. New material and/or heat treatment b. Quality Control action		

CODE I - EFFECT OF FAILURE ON MISSION

A - MISSION ABORT
B - PARTIAL SUCCESS
C - SUCCESS

CODE II - PROBABILITY OF OCCURRENCE AT PRESENT STATE OF THE ART

A - 1 FAILURE OUT OF TEN POSSIBLES
B - 1 FAILURE OUT OF 100 POSSIBLES
C - 1 FAILURE OUT OF 1000 POSSIBLES
D - 1 FAILURE OUT OF 10000 POSSIBLES

Fig. IV-C-4-2, Vol. I

5 Safety

a. Current Status

Paramount in the design of the NERVA engine and in procedures for testing and operation will be the safety of operating personnel and environmental populations, property, and equipment In addition, the terrestrial surface must be protected through design and operational safeguards against hazards connected with vehicle flight-testing and mission objectives. The nature of the propellant and the reflector material, the nuclear-reactor hazards, and fission-product generation when in operation, all contribute to the difficulty of meeting the safety objectives within the boundaries of existing technology and engineering data A research and development effort in support of these objectives will be required during the entire program

Throughout the ROVER program, LASL has given strong support to research into problems of safety, both in test operations and in problems anticipated in the incorporation of a Kiwi reactor into a flight vehicle. NASA and related agencies have conducted programs in support of nuclear flight safety problems in connection with SNAP programs and in anticipation of NERVA. The ROVER Flight Safety panel has sponsored a considerable program of advanced research and planning relative to safety in the space flight of a nuclear vehicle

Early in the NERVA program, it was recognized that the use of beryllium in a reactor subsystem could represent a health hazard in the event of an engine malfunction at the launch area The concern relates to the possible release of the beryllium either as vapor or as fine particles of the metal or its oxide in sufficient concentration to endanger surrounding populations An experimental program has been started, evidence thus far indicates that explosions of a forseeable magnitude are not likely to produce much dispersion. Current experimentation has not produced sufficient burning to provide any significant data on possible vaporization under severe burning. Further research is planned to resolve this question

Experimentation at LASL and NTS indicates significant fission product release from Kiwi fuel elements at high temperatures. Although this fact adds somewhat to the safety hazards which must be dealt with in ground testing, it suggests a means to significantly reduce the fission product inventory of an engine before destruction of the reactor structure prior to return to the atmosphere on completion of a mission, or after malfunction.

In connection with the problem of destruction of a reactor either before operation, in a launch pad alert, to prevent criticality on water or fuel immersion, or after operation, before reentry, LASL has developed some data on chemical reactions which might be useful in reactor destruction In cooperation with Aberdeen Proving Ground personnel, LASL has conducted preliminary experiments on the use of explosives for reactor disassembly or destruction. These preliminary experiments have provided encouraging results, further experimentation on the utilization of explosives for engine destruction are to be carried forward as part of the engine development program. The Martin Company, under an AEC contract, has explored analytically the ablation-oxidation characteristics of graphite under reentry conditions This work is being extended through an experimental program.

b. Proposed Program

Throughout the entire NERVA Program, a significant research and development effort in support of safety will be required. During the early stages of design, an intensive program must be undertaken in order to support design decisions which could affect the basic engine design. These will center principally around the validation of the selection of the reflector material, the physical and mechanical response to the transient behavior of the reactor nuclear design, and the accommodation into the engine and reactor of a workable safety destruct system.

Sufficient research data in these areas must be available to avoid the necessity of backtracking on basic design features in later stages of the program.

At the same time, R & D will be initiated in other areas of design refinement and in operating problems of a more continuing nature.

Specific R & D projects to be undertaken immediately include those covered below.

(1) Toxicity Hazards of Nonradioactive Materials

A program, already initiated, will be continued in investigation of the toxicity hazards related to the beryllium reflector under certain malfunction conditions, beryllium vaporization and oxidation data under conditions approximating those of a launch pad fire or explosion will be assembled from experimental rocket fires and explosions, and from laboratory

experiments, hazards associated with a possible beryllium-water reaction will be assessed through experimental and analytical work.

(2) Fission-Product-Release Experiments

An experimental program will be conducted to study the diffusion of fission products from NERVA fuel under post-operative conditions. This program will yield data on diffusion or leaching of fission products under water immersion conditions, and data on the possible partial decontamination of a spent reactor through post-operation over-heating before re-entry destruct

In-pile and post- irradiation experiments will be conducted to determine the extent and conditions for fission product release through diffusion. Chemical reactions and leaching in water will be studied experimentally, in conjunction with LASL.

(3) Mechanical and Physical Aspects of Excursions

The nature, severity, and probability of reactor excursions must be determined through both analytical and experimental research in order to determine the possible mechanical and physical consequences of malfunction, either in the test program or the handling, loading, and flight regimes for the NERVA engine. At all stages this work will be coordinated with LASL programs of similar nature.

Analysis will be made of reactor-excursion and post-excursion conditions for the reactor as designed for engine integration. These analyses will include the heat-transfer and fluid-dynamics aspects associated with water immersion of a NERVA core.

An experimental program in support of the above analytical work will be planned and executed in facilities such as the TREAT and SPERT reactors. Among other data, this program will provide information on "chugging," particularly in shallow water, the possibility of a destructive excursion while immersed in either shallow or deep water, and the possibility of fuel structure destruction resulting from an out-or-water excursion.

In cooperation with LASL, plans will be developed and evaluated for excursion experiments on fuel elements and full-scale reactors.

In cooperation with LASL, plans will be developed and evaluated for excursion experiments on fuel elements and full-scale reactors.

(4) Re-entry Heating and Burn-Up of Reactor Fragments

In support of the design and experimental work related to the terminal destruction of a post-operational engine, a program of experimental determination of the heating, vaporization, and oxidation characteristics of reactor fragments on re-entry into the atmosphere will be conducted.

Through the use of plasma jet, shock tube, or acceleration facilities, experiments will be planned and conducted on the burn-up of core fragments over a range of fragment sizes and shapes characteristic of those resulting from explosive destruction of a core.

Experiments will be conducted to separate effects of aerodynamic heating and oxidation.

In addition to the ground handling and flight safety development work discussed above, the safety program will involve review of all experimental engine designs, test procedures, post-mortem laboratory techniques, facilities designs, and facilities operating procedures. This review will assure the safe handling of fissionable materials, adequate safety precautions in reactor operations, and the elimination of possibilities of inadvertent radiation exposure to test operating personnel. The number, and the variations in operating regimes, of reactor test operations contemplated in the NERVA Program, together with the complexities in post-operational handling, require early and intensive safety planning, training, and staffing to assure the avoidance of a damaging incident to facilities of personnel.

6. Training

a. General Discussion

The purpose of this section is to present the approach and general philosophy which will be used in the development of the necessary, effective personnel training program to support the NERVA program.

The development of the training program will utilize the experience Aerojet has acquired in performing training functions for other rocket engine programs. While methodology of rocket engine training programs is a well-developed art, the introduction of nuclear energy in the propulsion system presents a challenging and fundamental difference in the personnel training approach - a difference which calls for instructing personnel in nuclear technology and in training personnel in the theory and operation of remote handling equipment.

The widespread application of nuclear energy has stimulated developments in "hot" laboratory operations so that these developments are no longer regarded as costly scientific tools, but as an integral part of development activities. Training for the NERVA program will cover both hot and traditional rocket engine training, embracing the problems of management and organization, personnel training, cost control, economy, and man-machine relationships. Serious attention will be given to all phases of these operations, especially to the selection and training of technical personnel, and in exercising surveillance of the man-machine relationships. The difficult problem of remote handling of radioactive assemblies will always dictate a costly type of operation and will require constant study of methods of increasing the economy of these operations. In these areas, well-trained technicians will play an important part.

b. System Analysis

During the intitial phase of engine development, analyses will be conducted to determine the system functions which require personnel action. These analyses will be documented in a form which will establish definitive criteria for personnel performance. This criteria will be complete to a degree that will provide a set of integrated, comprehensive source data from which relative man-machine function allocation, training and simulation equipment utilization, maintenance functions and personnel requirements can be determined.

IV Technical Discussion, C (cont.)

A thorough system analysis of such documents as remote handling, disassembly, and assembly equipment criteria will become the basis for the formulation of a training program related to remote handling systems; checkout and test systems, and transport, ground handling, and maintenance systems. A summary of the operating environment will be included to illustrate this phase of the training responsibility. To properly develop and verify the personnel subsystems, certain visual aids and support equipment will be required. The visual aids will be utilized in classroom instruction and as illustrations in the various directives and procedures.

The training support will include a simulated mockup building for testing of equipment to be used in the hot cells. A cold run will be made on cell equipment using the same number and type of manipulators as will be used in the cell to perform the actual operations. In addition to its function of testing of tooling and equipment to be used in the hot cells, the mockup area will serve as an environmental training area for engineers and technicians. The support equipment will include simulated and non-firable engines and components, and training GSE.

c. Design and Development Course

Classroom equipment will be utilized to acquaint personnel with the practical application of remote handling equipment, and the effect of remote handling equipment on specification of reasonable design criteria. As part of their orientation, the engineers will actively apply themselves to evaluate the capabilities and limitations of manipulators to become better acquainted with techniques of remote handling. The technicians will have similar exercises, except that they will spend approximately 80% of their time on the equipment and 20% in the classroom. Depth perception tests will be administered to the technicians.

d. Health Physics and Safety Course

A health and safety program at NTS, and at available reactor facilities, will be established for the training of personnel in the control of radiation and contamination.

Each individual engaged in these operations will be trained in all aspects of radiological safety.

Health and safety personnel will be assigned permanently to provide technical surveillance in matters involving radiological safety as well as to ensure continuous compliance with approved safety practices.

IV Technical Discussion, C (cont.)

The basis for the formulation of this section of the training program is directly related to Section IV-C-5, Safety.

e. Reliability Course

A continuing reliability training program will be established for management, supervisory, technical, and engineering personnel, and for clerical and labor forces.

These courses will provide for the dissemination of knowledge of pertinent reliability responsibilities, will provide emphasis on the importance of human performance, and judgment of the reliability of the overall system, and will provide assurance of communication between cognizant groups and other personnel to expedite reliability.

f. Preparation Course for Field-Test Engineers

This course will be designed for the test engineers who will participate in both engine and vehicle testing at NTS. It will be required that the test engineering personnel attend the design and development course prior to attending this course.

g. Technical Preparation Course, Field Testing

This course will be designed to train the engine mechanics and technicians prior to their assignment to NTS. The program will include both non-nuclear and nuclear mechanics. The technician will then be channeled into his specific area: electrical, mechanical, engine operation, GSE operation, or inspection.

h. Instructor Training

A capability to prepare and conduct the above courses will be developed by sending a select instructor team to NTS and other facilities involved in the NERVA program to learn the specific skills required and to gather data needed in the development of the above courses.

i. Training Management

Direction coordination, review, and approval of all NERVA training activities, as established by the project requirements, will be provided. This activity will monitor training functions at NTS, Azusa, Sacramento, and subcontractor locations.

Planning for the NERVA Training Program will involve determination of the personnel education and development of skills needed for the various development areas. Information from subcontractors as well as the AEC-NASA operations office will be utilized in this program development. Of special application will be the training of personnel required at NTS and other operating areas.

j. Training Materials

A lesson plan will be developed for each of the listed courses. The lesson plans for the supervisor and planners, and the design and development engineer courses will be based on four hours of instruction per day. The lesson plans for the field test engineers preparation, and the field test technician preparation courses will be based on eight hours of instruction per day.

The test procedures and equipment data developed to support the test program at NTS will be the prime reference documents to be used in conducting all the courses. These documents will be developed with assistance from training instructor personnel and will be designed to support training requirements.

A training manual will be prepared by the training staff and will be used to supplement the test procedures where necessary.

k. Training Facility

Classrooms currently available will be utilized for conducting the classroom instruction required in the above courses.

The mockup facility and equipment furnished to support the development of the engine hardware, ground support equipment, procedures development, and training will be used in conducting the laboratory instruction required. The facility and furnishings required have been included within other items of this proposal.

l. Training Program, 11 January Through 30 September 1962

The purpose of the training program during this period will be to plan and initiate a basic program for personnel assigned to operate remote handling equipment.

IV Technical Dicussion, C (cont.)

The major task during this period will be to perform a detailed analysis of the system training function. Much of this analysis will be based on the Kiwi test series training activities.

The training mockup room at Aerojet, Azusa will be used in initial instructor training.

7. LASL Support

The personnel assigned to LASL during the initial phase of the SNP-1 contract will continue in their assignments. It is understood that fifteen additional personnel are to be supplied during the contract extension period to assist with the Kiwi test program. This support will benefit the NERVA program, since it is assumed that these personnel will ultimately be available to assist the field test program of the NERVA engine. Their accumulated experience should prove invaluable in the expeditious conduct of the test operations.

IV Technical Discussion (cont.)

D. NATIONAL NUCLEAR ROCKET DEVELOPMENT CENTER SUPPORT

1. Master Planning

It is proposed that the NERVA Operations Office shall provide technical assistance to SNPO, Cleveland, for consultation, planning, integration, and technical direction to assure that the timely development of the National Nuclear Rocket Development Center will be compatible with the NERVA engine development-program requirements and growth objectives.

Program changes that develop during the engine-development program will be evaluated, and the consequences of these changes will be reflected in the overall requirements.

The development of a logistic and support plan for NNRDC is necessary to provide the site operations with material required by the development schedules. The NERVA engine program and supporting development activities, the engine-vehicle static-test program and LASL/AEC programs, will all require significant quantities of Government-furnished supplies, propellants, gases, critical materials, and equipment. In addition, facility component spare parts and equipment will be required throughout the program.

The provision of facilities is a critical Task that may pace the NERVA program. Figure IV-D-1-1 presents a review of the current status, application, cost comparison, required utilization, and decision-point data. A complete description of the NNRDC complex is obviously necessary.

A detailed evaluation of the program needs and requirements is necessary in order to clarify facility needs and their descriptions. It is apparent from a study of Figure IV-D-1-2 that various conclusions can be reached with regard to the procurement of a minimum-cost facility required to achieve a specific task, as compared with procurement of facilities that have the potential of satisfying long-term requirements. In some cases it may be necessary to sacrifice long-term gains to satisfy immediate objectives of the development program. Additional program work that might result from facility limitations can very quickly consume the equivalent of the basic facility costs, and these costs will be a continuous burden to the activity.

IV Technical Discussion, D (cont.)

Decisions must be reached for the procurement of long-lead-time facilities and the utilization of existing capabilities Specifically, these decisions are (a) facility plan for reactor development, (b) configuration and thrust rating of ETS-2, and (c) facility for CITS program.

In addition to major test-stand facilities, consulting support will be provided by NERVA Operations in planning for associated NERVA-facilities support items (administration engineering support, contaminated-waste handling and disposal, general yard facilities, etc.). Operational and functional requirements will be determined.

N N R D C

Facility Application Analysis

Test Schedule Reference
NRX-1 8/63
CITS 6/63
E Engine 3/64

	Test Cell A Unmodified	Test Cell A New Data Processing System in Original CP	Test Cell A New CP	New Reactor Development Facility Attached to ETS-1	New Reactor Development Facility Complex (Test Cell A Type)	Test Cell C (Not considered for engine program)	ETS-1 CITS Conversion	New CITS Facility Complex	ETS-1 E Engine	ETS-2(a) ETS-1 Design 4000 MW Type (ETS-1 Complex)	ETS-2(b) Engine Run Tank Close Couple 4000 MW Type (ETS-1 Complex)	ETS-2(c) Engine Run Tank Close Couple 16000 MW Type (ETS-1 Complex)	ETS-3(a)(10) Engine Run Tank Close Couple 4000 MW Type (New Complex)	ETS-3(b)(10) Engine Run Tank Close Couple 16000 MW Type (New Complex	NTS-MAD Complex	E-MAD(9) Basic Facility
Status/Availability	Existing	~9 mo	~12 mo	~15 mo	~18 - 20 mo	Existing	15 Dec 1962	~18 - 20 mo	Equipped for NERVA 15 Dec 1962	Equipped for NERVA - 15 mo	Equipped for NERVA - ~20 mo	Equipped for NERVA - ~24 mo	Equipped for NERVA ~ 20 mo	Equipped for NERVA ~ 24 mo	Available (Currently being modified)	Cold Assy - 2/63 Hot Dis-assy 7/63
Applicability																
NRX	X	X	X	X	X										X Initial Use	X
CITS	Δ(1)	Δ(1)(4)	Δ(1)	Δ(1)	Δ(1)											
E Engine									⊠	⊠	⊠	⊠	⊠	⊠		⊠
LASL Programs (KIWI-N) (Indeterminant)	⊗ (2)(3)					⊗									⊗ (4)(8)	
Facility Cost to Program	⊖	~1.3 x 10^6	~3.5 x 10^6	~7.5 x 10^6	~12 x 10^6	⊖	?		~13 x 10^6	~8.5 x 10^6	~9 x 10^6	~11 x 10^6	~13 x 10^6	~15 x 10^6	⊖	~6 x 10^6
When Required for Beneficial Occupancy						⊖										
NRX(1)	7/63	7/63	7/63	7/63	7/63										6/63	7/63
CITS							3/63	3/63							2/63	7/63
E Engine									9/63	9/63	9/63	9/63	3/64	3/64	⊖	7/63
A & E Contract Initiation		10/62	7/62	2/62	11/61(5)	⊖	5/62	9/61(5)	Retrofit (6)	6/62	1/62(7)	9/61(5)	7/62	3/62	⊖	12/61(7)

NOTES:
1. Possible application with program consequences.
2. Continued LASL programs on "A" interfere with NRX Series.
3. Program conflict in Control Point Systems.
4. Joint occupancy by LASL/NERVA of Building.
5. Impossible schedule.
6. CITS Program terminated after 3 mos. testing to retrofit ETS-1 for Engine service.
7. Immediate A & E action required if growth potential to be achieved.
8. Program conflict potential.
9. Basic facility excludes hot cells and partial equipment required for all program use. Contract hot cells must be used until site cells available. Delay in post mortem data.
10. ETS-3 required by 3/64 if ETS-1 is continuously employed in CITS Program.

Table IV-D-1-1, Vol. I

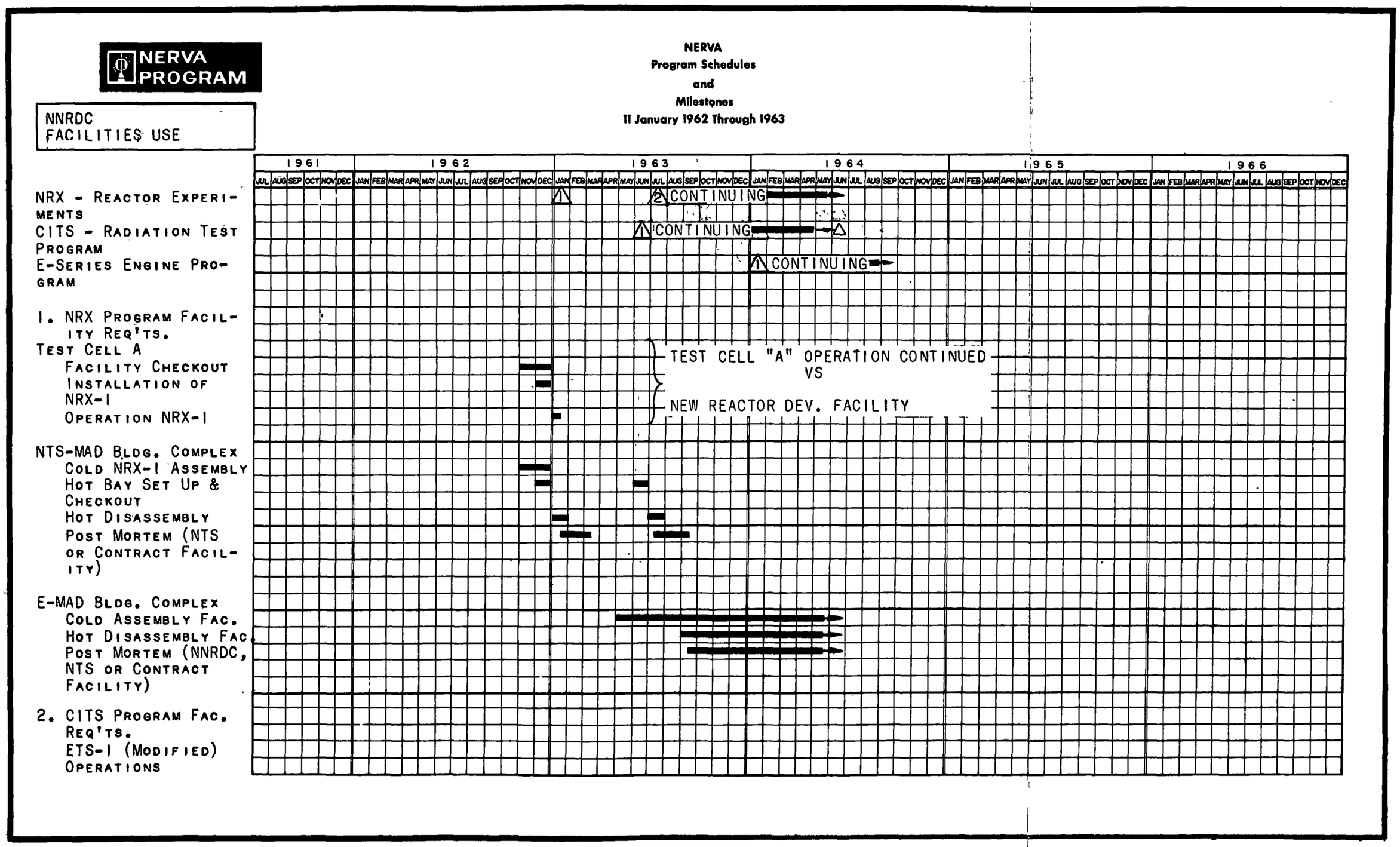

Fig. IV-D-1-1 (Sheet 1), Vol. I

NERVA PROGRAM

NNRDC
FACILITIES USE

NERVA
Program Schedules
and
Milestones
11 January 1962 Through 1963

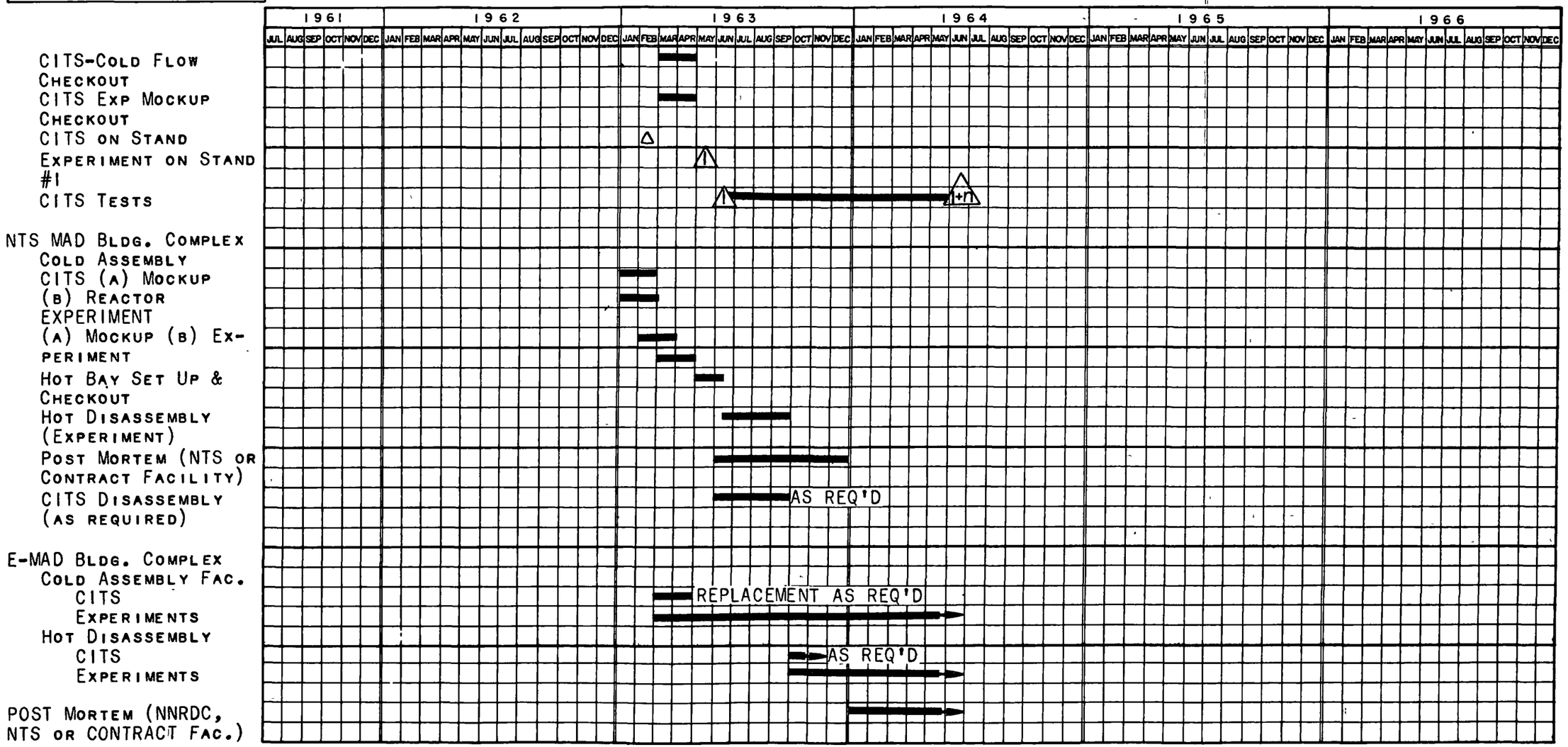

Fig. IV-D-1-1 (Sheet 2), Vol. I

NERVA PROGRAM

NNRDC
FACILITIES USE

NERVA
Program Schedules
and
Milestones
11 January 1962 Through 1963

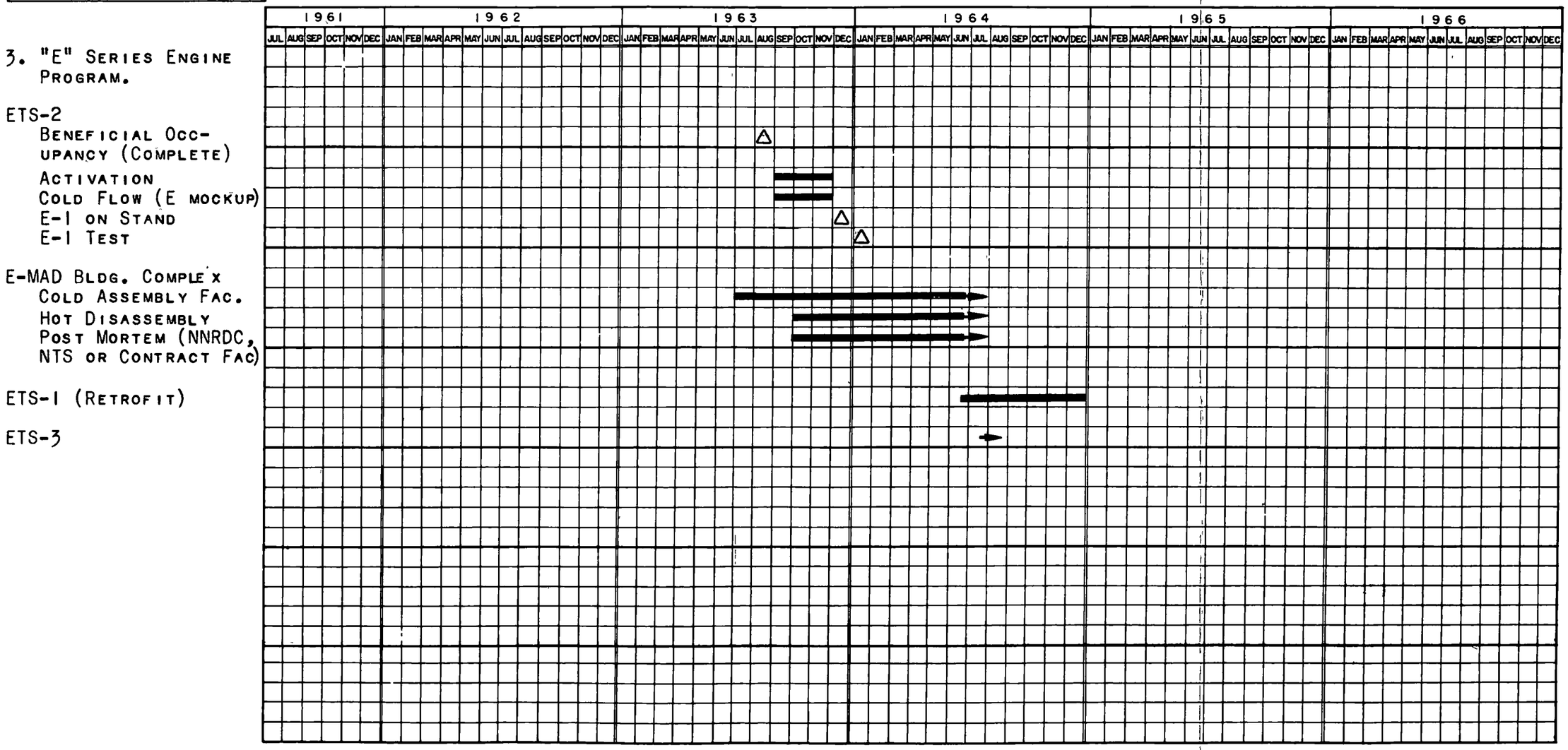

Fig. IV-D-1-1 (Sheet 3), Vol. I

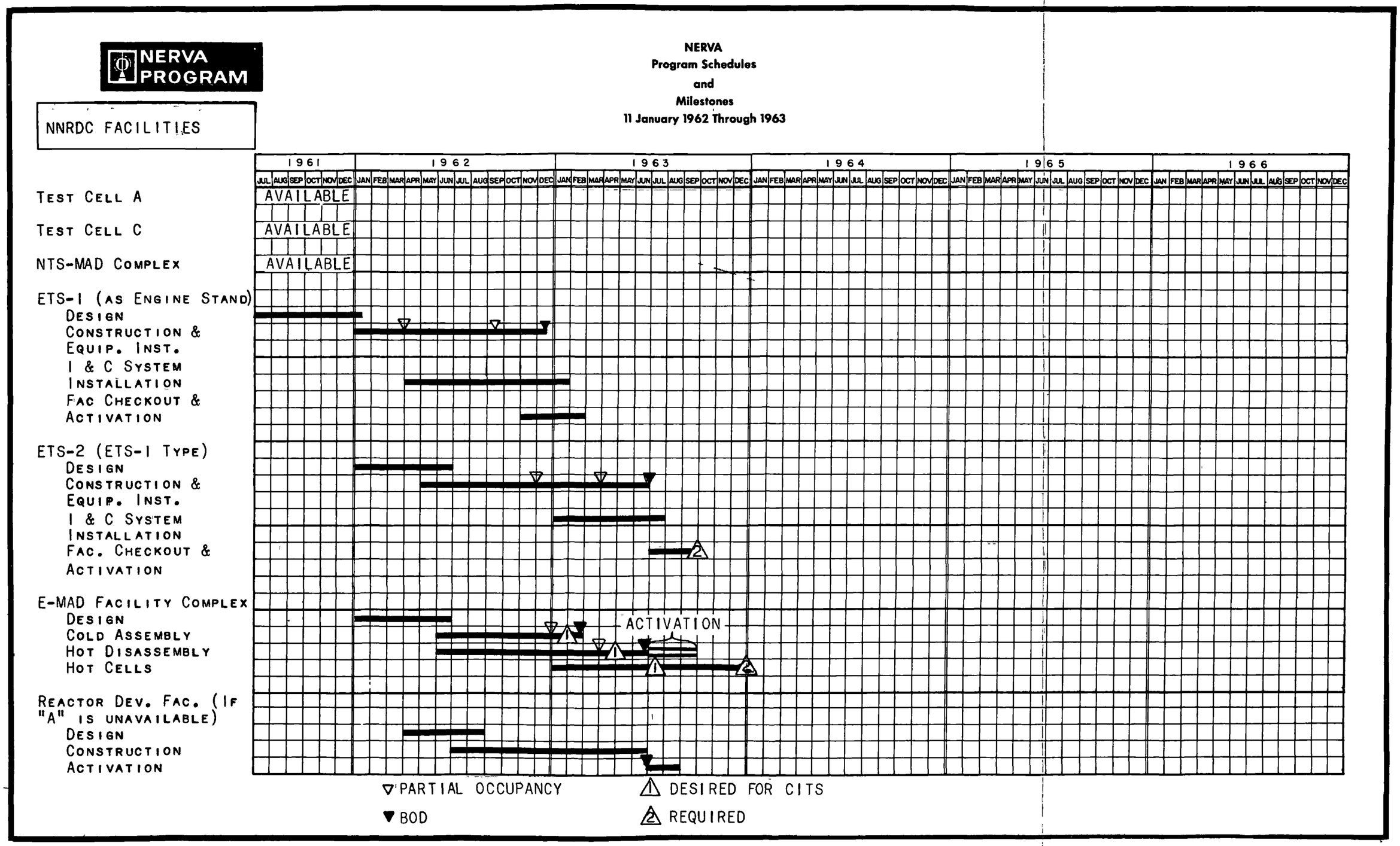

Fig. IV-D-1-2 (Sheet 1), Vol. I

NERVA PROGRAM

NERVA
Program Schedules
and
Milestones
11 January 1962 Through 1963

NNRDC FACILITIES

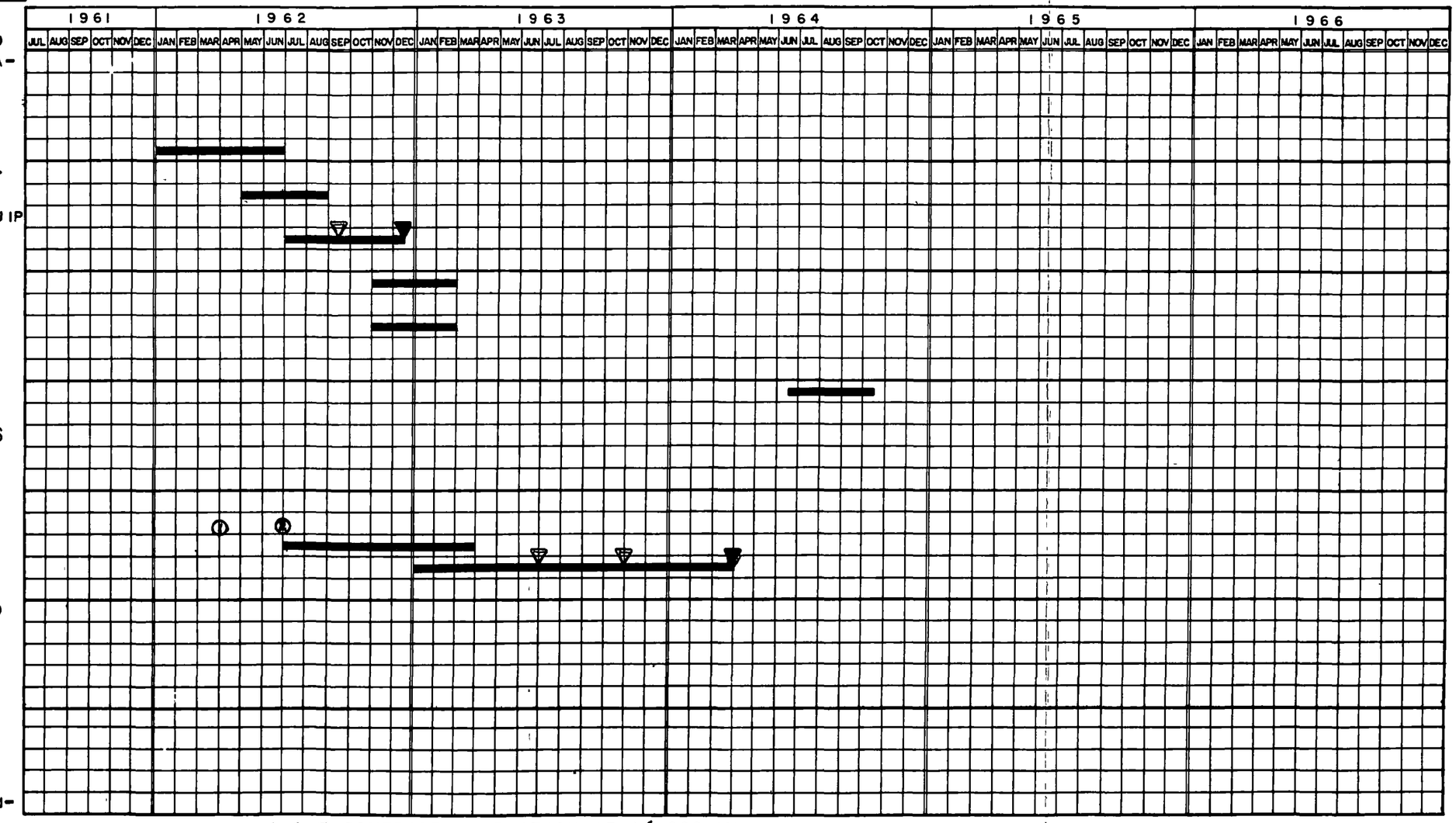

① A & E CONTRACT INITIATION IF 16,000 MW GROWTH CAPACITY.
② A & E CONTRACT INITIATION IF 4000 MW GROWTH CAPACITY.

Fig. IV-D-1-2 (Sheet 2), Vol. I

2. Engine Test Stand 1 (ETS-1)

The ETS-1, designed by technical direction from the Los Alamos Scientific Laboratory, will be transferred to the SNPO, Cleveland office, in January 1962. As the user of this facility, the contractor is obliged to completely evaluate its operational, functional, and safety characteristics, as applicable to the NERVA program. In addition, the contractor must achieve complete familiarity with the design, capabilities, and limitations of the facility in order to operate it and to achieve the goals established by the NERVA-program development tasks.

Although the evaluation of ETS-1 is a continuing task initiated during the original contract period, detailed analyses and evaluations have only been initiated. In some cases, because the design plans and specifications have not yet been released, the analysis of certain segments cannot yet be initiated. Figure IV-D-2-1 illustrates the present status of ETS-1.

The test stand has yet not been completed, but plans are already being made to employ it for the installation of the CITS, which may require some services and/or additional gas storage not provided for in the present concept. This application is discussed elsewhere.

In preliminary evaluation, several items have not been provided within the A&E design or procurement. These items are identified as engine-test-stand interfaces; the detailed designing of these items has been delayed until the engine-design and test-installation objectives are identified. In addition, the facility instrumentation and control, engine instrumentation and control, and data-acquisition systems were not included in the original A&E procurement.

Through technical assistance and consulting support to SNPO, Cleveland, the contractor will participate in the technical management of ETS-1. In this status, and as the user of this facility, Aerojet NERVA Operations will complete the interface-equipment design and provide the items required to accommodate the engine system. All plans, specifications, and reports will be reviewed, as will the LASL/A&E plans for checkout procedures. If checkout and activation procedures and plans do not exist, action will be initiated to prepare them. As the construction contractors complete their tasks and prepare their systems for checkout, Aerojet NERVA Operations will assist SNPO-C in a technical review of all checkout operations to ascertain the quality and status of the specified system, and the "as built" designs.

IV Technical Discussion, D (cont.)

At the end of Phase I, the detailed design criteria will have been completed for the ETS-1 instrumentation system, including engine control, facility instrumentation, and the data acquisition system. The work proposed for the follow-on period, January 11,1961 to September 30,1962, includes detail design, fabrication and procurement, and the initiation of installation. Limited procurement and completion of the installation will continue beyond 30 September 1962, with checkout being completed in March 1963. NERVA Operations will provide technical support throughout the installation of the instrumentation and control system and final activation, checkout, and shakedown of the facility.

All designs, checkout and operations maintenance manuals, test procedures, specifications, directions, inspection reports, acceptance reports, and radiation safety hazards and effects, will be reviewed in conjunction with or as directed by SNPO-C and/or written to provide operational, functional, and safety data as required. Facility records will be established and maintained.

ENGINE TEST STAND NO 1

[redacted] PRELIMINARY DESIGN
[redacted] DESIGN
BID & AWARD
CONSTRUCTION

CONSTRUCTION CONTRACT	EST COST 1000's	LOW BID
FUNDING FY 1961		
ROAD "K" & WATER LINE "G"	283	200
BUILDINGS & UTILITIES	1410	1198
LIQUID HYDROGEN DEWAR	390	329
HIGH PRESSURE GAS VESSELS	486	431
RAILROAD EXTENSION	270	231
FUNDING FY 1962		
TEST STAND & PROCESS SYSTEMS	4877	4589
MISC PROCESS VESSELS	365	357
FACILITIES INSTRUMENTATION & CONTROLS	155	—
STEAM GENERATORS	250	—
RADIATION SHIELDS	560	—
EXHAUST DUCT SYSTEM	840	—

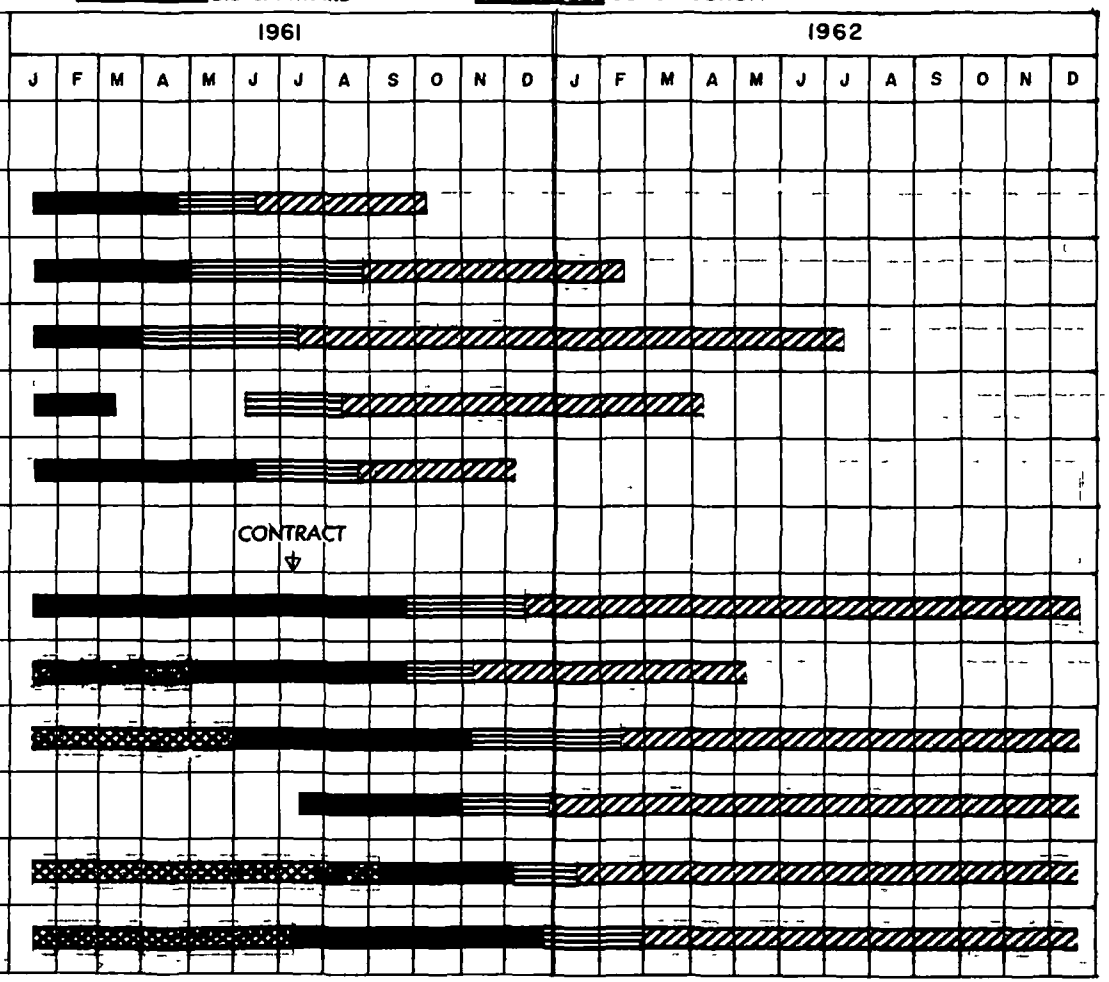

Fig. IV-D-2-1, Vol. I

3. Engine Test Stand - ETS-2

During evaluation studies of the engine program development schedule, it became apparent that more test capability is required than can be provided by ETS-1. It also became apparent that early close coupling of the engine and the run tank is desirable to evaluate the influence of the neutron and gamma radiation on the suction characteristics of the turbopump, and on propellant circulation and heating in the run tank. These facts established the need for a second engine test facility at NNRDC. Logically, placement and integration of this new facility within the ETS-1 complex represents an opportunity to capitalize on utilization of some portion of ETS-1, thus providing reduction in overall cost.

The requirements for ETS-2 presented in the A&E procurement specification of SNPO-C which established their interest and their desire to obtain growth capability in future facility procurement. Aerojet, during Phase I, began a study based on the NASA specification to derive the operational and functional requirements for a second engine test facility. The objective of this study was to provide, to the selected A&E, basic engine data, conceptual-operational layouts based on the NERVA program needs, and the integration of this facility into the ETS-1 complex.

The provision of a facility on-stream by September 1963, and useful to supporting the NERVA program requirements, and, at the same time, providing facility growth to handle 16,000 megawatts, presents a rigorous (if not unattainable) time schedule. The proposed program requires the use of ETS-1 for installation and operation of the Components Irradiation Test System with installation scheduled in early 1963 and testing scheduled to start in June 1963 and to proceed beyond June 1964. Since the NERVA engine development requires the testing of E-1 engine to commence in the first quarter of 1964, and since Test Stand ETS-1 will be occupied by the CITS installation, the E-1 engine will have to be installed in Test Stand ETS-2.

The present NASA schedule for ETS-2, defined as an engine-vehicle test stand capable of accommodating 16,000 mw (that is, one embodying a close-coupled engine and run-tank concept) is to have beneficial occupancy by December 1963. Since several months are required for instrumentation installation and facility ckeckout, it is obvious that the NERVA engine test program cannot begin in the first quarter of 1964 as planned. The schedule can be met if ETS-2 is designed as a "carbon-copy" of ETS-1, since such a facility can be built and occupancy achieved by July 1963. It is therefore recommended that ETS-2 be constructed as a pure engine test stand as is ETS-1 so that it can be made available when needed. A decision as to the type and availability of ETS-2 is required before January 1962.

IV Technical Discussion, D (cont)

While the decision to utilize ETS-1 for CITS and to change the design of ETS-2 is highly recommended, the NNRAC engine development test area will be lacking an engine-vehicle integration stand and will possess no spare or alternate test stand capability.

Various approaches to providing the required facilities have been studied, it is believed the following recommendation will provide the needed facilities without additional Fiscal 1963 expenditures. It needs only an administrative decision for implementation. Simply, the second and very necessary test stand for NERVA development can be supplied by utilizing the first of the Vehicle area stands, which is scheduled for occupancy in April 1964. All that is required is that the stand be assigned for engine development until the load on ETS-1 ceases, and that sufficient authority be granted to assure that VTS-1 can be made to accommodate the engine for testing.

Technical management assistance will be provided to SNPO-C in review and evaluation of A & E preliminary and final designs. Evaluation of the facility design will embody analyses as required to establish that the facility is operationally and functionally adequate and that it incorporates the safety requirements dictated by the NERVA Program. Engineering data developed for ETS-2 will be provided in support of the Master Plan effort and overall NERVA Facility construction requirements.

Engineering and technical services will be provided for the instrumentation and control system for the ETS-2 complex as necessary, to integrate the ETS-2 facility into the ETS-1 complex for the maximum feasible dual utilization and economy. Designs for the changes, or added instrumentation and controls unique to engine test responsibility, will be prepared A & E review and participation in upgrading the ETS-1 instruments and controls to encompass ETS-2, and consultation with the NERVA personnel, will assure the realization of a composite facility with instrumentation adequately and properly integrated.

Engineering support and technical effort will be expended for the development of checkout and activation plans, operational and maintenance procedures, and safety specifications of the various systems and facility. Facility-engine interface systems will be developed as required to accommodate the NERVA test programs and remote handling systems.

IV Technical Discussion, D (cont.)

At the end of September 1962 it is anticipated that the design of the engine controls and any modifications to the complex instrument and control system will be in detail design with procurement being initiated in the last quarter of 1962 for final installation and checkout being completed in October 1963.

4. E-MAD Facility Complex

Engineering studies conducted during the initial phase of the NERVA research and development program have developed preliminary operational and functional requirements for the E-Mad facility complex. These plans have been based on the use of assembly/disassembly procedures for the NERVA Engine. In addition, application of a NERVA assembly/disassembly tooling and equipment concept has provided the spacial arrangements and general dimensions. These plans and concepts also provide basic building floor plans, orientation, and E-MAD facility equipment requirements.

Other programs such as the NRX reactor development, the Component Irradiation Test System and Experiments, and the Engine-Vehicle Static Test programs will also utilize the E-MAD facility complex. It is planned for the NRX program to utilize to the extent feasible the LASL/ACFI Kiwi-B, or equivalent, type system for assembly-disassembly.

The fact that two distinctly different types of handling systems are required does not appear, in itself, to cause a conflict in the building design requirements, in principle, conflict may occur only in scheduling and storage of equipment Evaluations of E-MAD operations, including the NRX and CITS programs, are to continue. Technical assistance and consulting support to SNPO-C will be continued throughout the final design, construction, and installation program. As the first user of the facility, it is suggested that Aerojet be made responsible for evaluation of the facility for operational, functional utility, and the safety considerations specified by the NERVA Program.

Facility and equipment installation and checkout procedures, plans, and tests, will be reviewed and activation plans will be developed and utilized by NERVA Operations.

Master-control systems, remote-handling facility systems, and engine manufacturer-supplied remote-handling systems will be integrated by development of a basic criteria specification.

A & E safeguards studies will be reviewed and hazards reports will be brought up to date as operations are better understood.

IV Technical Discussion, D (cont)

Facility support equipment, such as machine shop tools, and equipment, will be defined and requisitioned through approval of SNPO-Cleveland.

Studies of facility utilization, with respect to time, programs, rate, and so forth, will be conducted to determine the facility capabilities and limitations. Economic considerations and the influence to the development schedule of offsite vs onsite post mortem operations will be examined. Recommendations of additional support as required will be submitted to SNPO-Cleveland, for action.

5. Reactor Development Facility (RDF)

Preliminary engineering studies have been conducted during the proposal period to evaluate possible facility applications for the NRX program. These studies and data are presented in Table IV-D-1-1. More detailed analyses will refine the data presented in this table and will permit a better qualified judgement when evaluated against a development program, test objectives, requirements, and schedules.

Program planning of this activity is required, and technical assistance to SNPO-C will be provided for implementation or acquisition (or both) of facilities required to support this program.

With the decision and acceptance of a specified approach, engineering requirement, evaluation, operational, functional, and safety studies, as necessary to verify the facility applicability, will be conducted.

Dependent upon the decision for the test facility, follow-on engineering services throughout A & E design, instrumentation design, construction, fabrication, and procurement, installation, checkout, and activation will be provided.

6. Component Irradiation Test System Facility (CITSF)

Preliminary evaluation and engineering studies will be conducted for the provision of a facility having the test capability to test engine and vehicle components, subassemblies and subsystems in a radiation environment. Because of engine component development schedules and test hardware availability, utilization of ETS-1, which is under construction, offers the only solution for early availability of a NNRDC CITS capability. Figure IV-D-6-1 presents a conceptual layout for the CITSF. Accommodation of CITS in the ETS-1 is time limited if ETS-1 is to become the first engine test facility. Extended usage of ETS-1 for CITS presents alternate solutions for engine test facilities, which are discussed in Section IV-D-1 with reference to Figure IV-D-1-1.

Integration of CITS into ETS-1 and technical management services will be provided to assist and support SNPO-C management as required in arriving at a decision related to the use and application of ETS-1 for the CITS Program. With direction established, operation, functional, and safety data will be developed in support of the design changes necessary to permit CITS testing in ETS-1.

ETS-1 checkout, activation, plans, specifications, and operations and maintenance reports will be modified as required to accommodate the CITS system. The instrumentation and control system for ETS-1 will be reviewed to ensure compatibility with the CIT system.

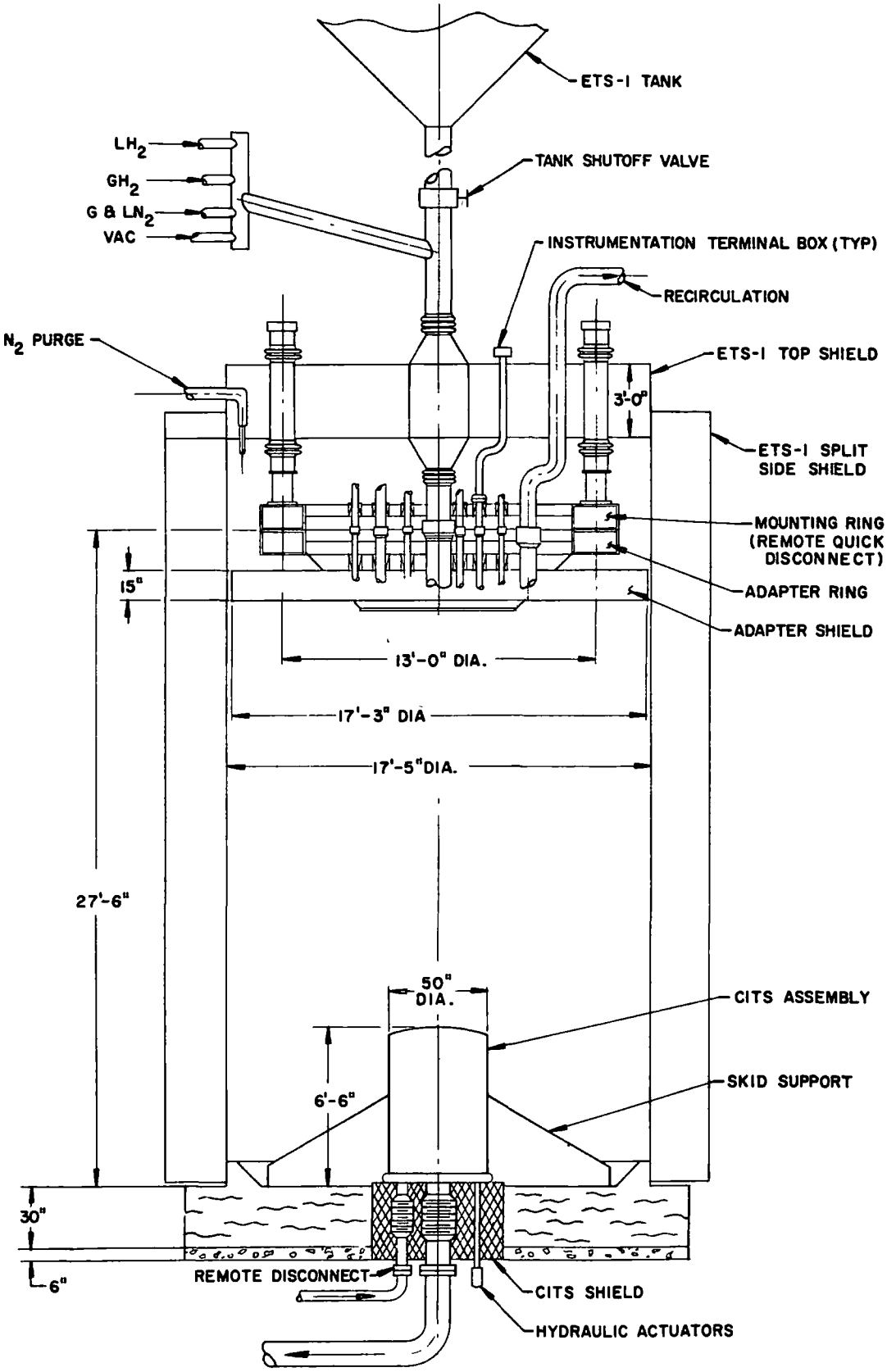

CONCEPTUAL LAYOUT FOR
COMPONENT IRRADIATION TEST SYSTEM FACILITY (ETS-I INSTALLATION)

Fig. IV-D-6-1, Vol. I

IV Technical Discussion (cont.)

E. PROGRAM MANAGEMENT

1. PERT System

The NERVA program involves not only the normal factors encountered in the development of a chemical liquid-rocket engine but also those peculiar to the integration of a liquid-propellant system with a high-power-density reactor. New facilities are required, and the scheduling of their activation becomes very critical to the success of the program. The scope of the program is such as to require several major subcontractors to be involved at remote geographical locations. Finally, a vehicle contractor will soon be selected, and close coordination with the overall vehicle-launch program will be required.

These complicating factors make it difficult to maintain constant control of all program elements in a constantly changing program without the aid of some system capable of handling large amounts of information. The already proven PERT system will therefore be utilized as a tool for the management of the NERVA program.

It is realized that such a system is only a tool, however, and that the information an electronic computer can generate is no better than the data input. This means that all major participants in the program must have a strong management staff capable of providing the proper kind of planning information needed for the computer operation and equally capable of using the output information in a knowledgeable manner.

All program participants have developed this capability during the initial contract effort, and a common-language computer program has been developed. As the program continues, the capability will be expanded and the level of pertinent information usable for program management will be continually broadened.

2. Fiscal Control

Because of the large number of participating activities and the diversifications described above, the problem of fiscal control is likewise complex. During the initial contract effort it was necessary to derive and integrate much of the data needed for fiscal program control by manual methods.

This problem has been carefully studied, and steps have been taken to mechanize much of this effort in the future. As the program progresses, the amount and quality of such information will be continually improved with the objective of ultimately combining significant fiscal information with the information obtained from the PERT program.

3. Reporting

Monthly informal progress reports were provided during the initial contract effort. This type of information is timely and concise and provides a suitable means of conveying the overall status of the program. To improve this system, it is planned to supplement the letter report with significant readouts from the PERT program so that critical areas can be easily understood. The management action taken to correct critical problems will be briefly described.

The technical results of the initial contract effort will be presented in final topical progress reports. This procedure appears reasonable for a short-duration project but is not considered adequate for a program lasting several years. Quarterly or semiannual reports could improve on this but tend to be untimely in most cases, and their tendency toward formality leads toward excessive expense in the preparation.

The solution appears to be more emphasis on verbal communication by telephone and telegraph, and through periodic coordination meetings. Then, as significant results are obtained or critical technical developments reach a conclusion, brief, informal technical summaries will be prepared using inexpensive techniques of preparation. This procedure will be supplemented, where applicable, by topical or progress movies where this medium can provide the best understanding of the problem or the progress achieved.

4. Assessment of Data

As the program expands and more design, quality-control, reliability, and test data become available, it will become increasingly difficult to store and assess such data. Again, it would appear logical to utilize the speed and capacity of electronic data-handling systems. For this reason, a study will be made to determine areas in which such a system can best be utilized so that a suitable system can be developed and implemented by the time the amount of data involved is such as to require the use of this technique.

F. FACILITIES AND ASSOCIATED SPECIAL TEST EQUIPMENT

1. Facilities

The NERVA program requires the use of many existing facilities as well as some additional new facilities which are currently under construction at both Aerojet and Westinghouse. The facilities involved are located at Aerojet's Liquid Rocket Plant in Sacramento, the controls laboratory and proving grounds at Azusa, and the Westinghouse Laboratories at Pittsburgh. They are illustrated in Figures IV-F-1-1 through IV-F-1-17.

a. Liquid Rocket Plant

The list of contractor-furnished LRP facilities presented in Table IV-F-1-1 updates the original lists presented in the previously referenced Tables V-1 and V-2 of Volume XIV, of Aerojet's original proposal (VE-61003). The basic plan for provisioning such facilities at the LRP has not changed; however, certain item descriptions have been altered and new facilities have been added to reflect the most recent design concepts. Aerojet's planned investment of its capital, up to $2,322,500, represented by the original facility items of Tables V-1 and V-2 remains unchanged. An additional $620,000 above that represented by the original items of Tables V-1 and V-2 of Proposal VE-61003, Volume XIV, is now planned for investment. Approximately $500,000 of this amount will be applied toward the construction of an Engineering Cryogenics Laboratory building.

b. Azusa Plant

The analog equipment installed at the Azusa facility, as shown in Figure IV-F-1-17, will be expanded, the area housing this system is adequate for the intended expansion.

c. Westinghouse

The extensive facilities presently in existence at Westinghouse for the performance of nuclear reactor research and development, were discussed in the Westinghouse original proposal for the NERVA project. These facilities are adequate for accomplishing the NERVA program with the exception of a graphite fuel element fabrication facility. Such a facility is being provided by Westinghouse with a capital expenditure of approximately $2,000,000.

TABLE IV-F-1-1

CONTRACTOR-FURNISHED FACILITIES

I. NON-SEVERABLE FACILITIES

A. Test Zone "H", Test Stand H-4, 5, & 6, Mechanical, Civil and Electrical

1. Site preparation for storage areas, access roads, pipe supports, and control room addition.

2. Concrete work for storage area unloading aprons and drainage trenches.

3. Earth revetments for blast protection and propellant spill containment.

4. Drainage trenches and culverts through revetments.

5. Railroad spur track for Zone "H" propellant off loading.

6. 2,100 sq ft addition to existing control room H-2.

7. Substation equipment additions including power distribution and electrical service extensions.

8. Access roads and paving

9. Terminal room.

B. Test Zone "A", Engineering Cryogenic Laboratory, Mechanical, Civil and Electrical

1. Site Preparation.

2. Water distribution piping system from Test Zone "C".

3. 5400 sq. ft. new laboratory building.

4. 5800 sq. ft. new test bay area.

5. Water distribution system within Test Zone "A".

6. Air conditioning and plumbing services within laboratory building.

TABLE IV-F-1-1 (cont)

7. Electrical services including lighting, power panels and area lighting.

8. Environmental chamber pit.

II. SEVERABLE FACILITIES

A. Test Zone "H", Test Stands H-4, 5, and 6, Mechanical, Instrumentation, and Controls.

1. One 100,000 gal (90,000 gal nominal) vacuum insulated storage vessel, 75 psig for LH_2.

2. Two 80,000 SCFH, 5,000 psig 25 HP, LH_2 Pump and vaporizer units.

3. LH_2 fill system, vacuum insulated.

4. LH_2 transfer and distribution piping system vacuum insulated.

5. GH_2 transfer pressurization and vent piping systems.

6. Deluge and safety shower systems for LH_2 and GH_2 storage area.

7. One 28,000 gal, 100 psig vacuum insulated vessel for LN_2.

8. One 250 gpm, 100 psig, 25 HP transfer pump for LN_2.

9. One 82,000 SCFH, 5,000 psig 30 HP, LN_2 Pump and vaporizer unit.

10. LN_2 fill piping.

11. LN_2 suction, transfer, and distribution piping systems.

12. GN_2 transfer pressurization and vent piping systems.

13. Safety shower for LN_2 storage area.

TABLE IV-F-1-1 (cont.)

14. One 28,000 gal, 100 psig vacuum insulated vessel for LO_2.

15. One 250 gpm, 100 psig, 25 HP transfer pump for LO_2.

16. LO_2 fill system.

17. LO_2 suction, transfer, and vent piping systems.

18. Deluge and safety shower systems for LO_2 storage area.

19. Two 1300 CF (450,000 SCF) 5000 psig carbon steel vessels for CH_2.

20. GH_2 fill piping system.

21. GH_2 discharge piping systems.

22. GH_2 vent system, including stack.

23. Safety shower for GH_2 storage area.

24. One 1300 CF (450,000 SCF) 5000 psig carbon steel vessel for GN_2.

25. Water distribution system.

26. One 5000 GPM, 470 psig water pump and piping system.

27. Modification of existing T. V. System

28. Gas detector system.

29. Analog-to-digital data system.

30. Strip chart recorders.

31. Oscillograph magazine.

Table IV-F-1-1 (Sheet 3), Vol. I

TABLE IV-F-1-1 (cont.)

32. Tape recorder system.

33. Time interval measurement system.

34. Electrical power controls.

B. Test Zone "A", Engineering Cryogenics Laboratory, Mechanical, Instrumentation, and Controls

1. LH_2 Unloading Piping System.

2. LH_2 Distribution Piping System.

3. LN_2 Unloading Piping System.

4. LN_2 Distribution Piping System.

5. H_e Distribution Piping System.

6. Plant Water, Distribution Piping System.

7. Plant Air, Distribution Piping System.

8. Deluge Water, Distribution Piping System.

9. Vacuum Piping for Vacuum Jacketed Lines and Tank Pulldown System.

10. Piping Supports.

11. LH_2 storage tank, 2600 gallon.

12. LN_2 storage tank, 2600 gallon.

13. Instrumentation.

14. LH_2 Pump and Converter.

Table IV-F-1-1 (Sheet 4), Vol. I

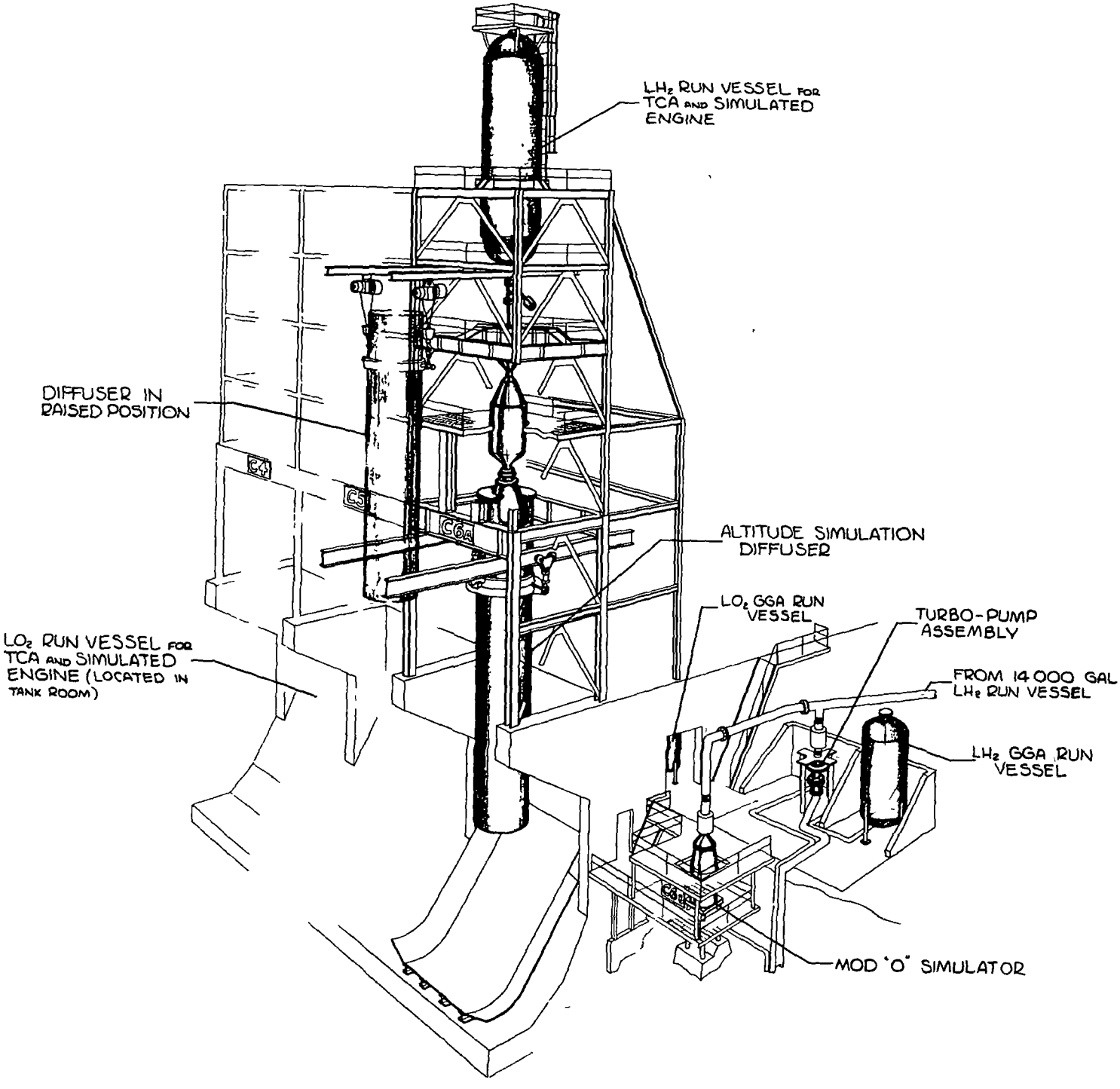

Test Stands C-4, C-5, C-6

Fig. IV-F-1, Vol. I

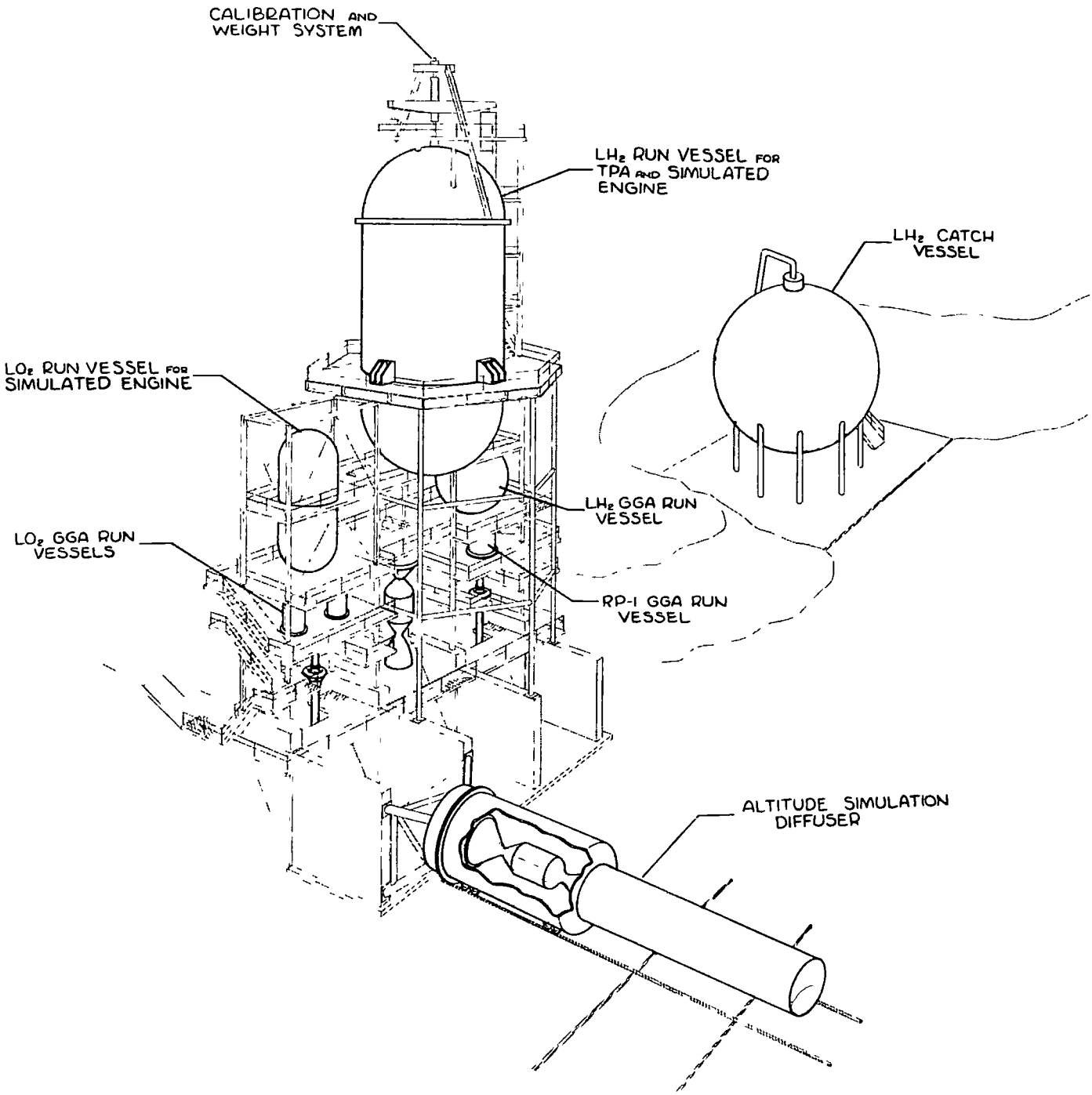

Test Stand H-4, H-5, H-6

Fig. IV-F-2, Vol. I

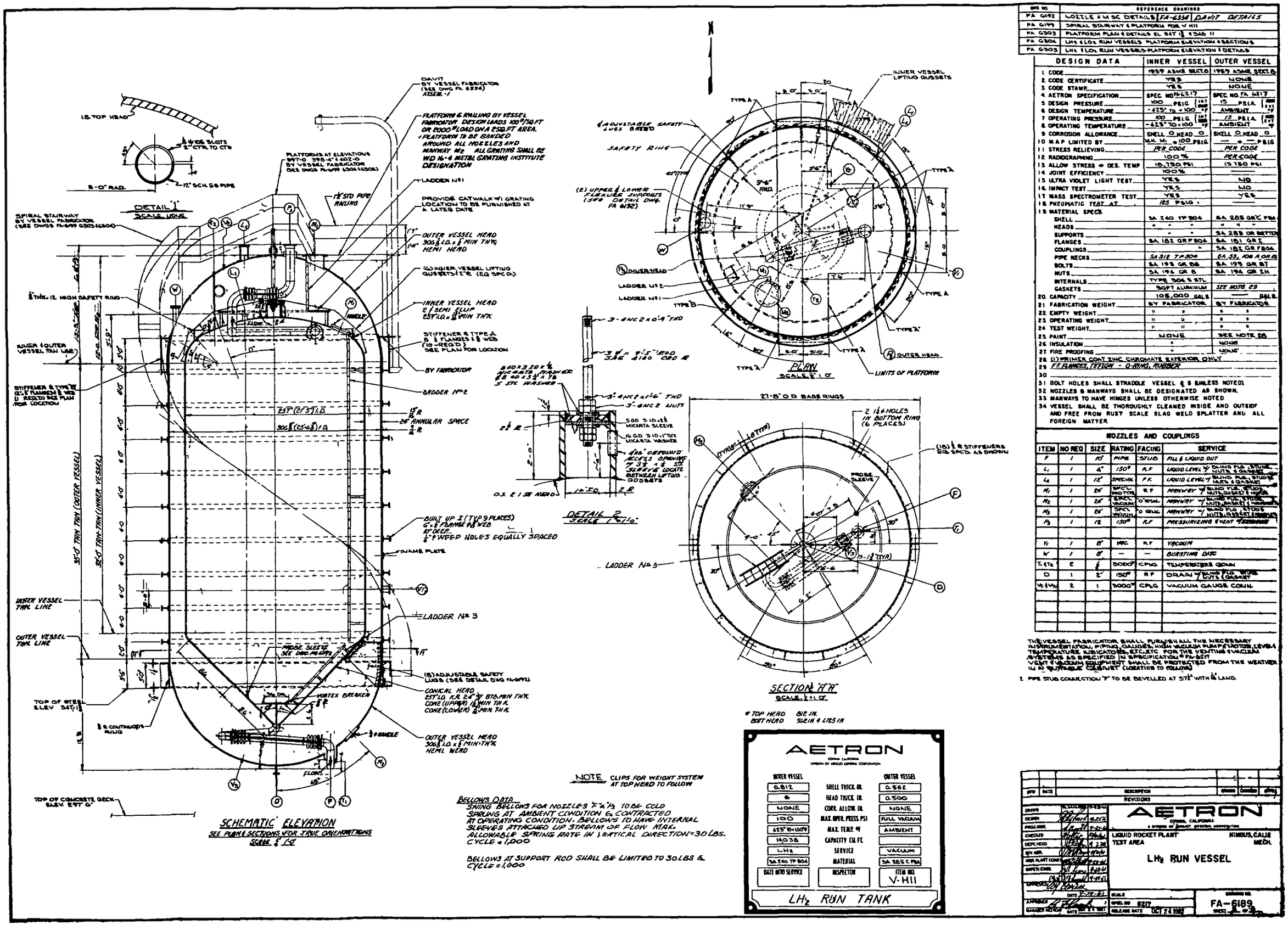

NOTE CLIPS FOR WEIGHT SYSTEM AT TOP HEAD TO FOLLOW

BELLOWS DATA
SWING BELLOWS FOR NOZZLES "F" & "F1" TO BE COLD SPRING AT AMBIENT CONDITION & CONTRACTED AT OPERATING CONDITION. BELLOWS TO HAVE INTERNAL SLEEVES ATTACHED UP STREAM OF FLOW. MAX. ALLOWABLE SPRING RATE IN VERTICAL DIRECTION = 30 LBS. CYCLE = 1,000

BELLOWS AT SUPPORT ROD SHALL BE LIMITED TO 30 LBS & CYCLE = 1,000

REFERENCE DRAWINGS		
FA 6192	NOZZLE & MISC DETAILS	FA-6334 DAVIT DETAILS
FA 6199	SPIRAL STAIRWAY & PLATFORM FOR V-H11	
FA 6303	PLATFORM PLAN & DETAILS EL 347'1" & 348'11"	
FA 6304	LH2 & LO2 RUN VESSELS PLATFORM ELEVATION & SECTIONS	
FA 6305	LH2 & LO2 RUN VESSELS PLATFORM ELEVATION & DETAILS	

DESIGN DATA	INNER VESSEL	OUTER VESSEL
1 CODE	1959 ASME SECT.8	1959 ASME SECT.8
2 CODE CERTIFICATE	YES	NONE
3 CODE STAMP	YES	NONE
4 AETRON SPECIFICATION	SPEC NO FA-6217	SPEC. NO. FA 6217
5 DESIGN PRESSURE	100 PSIG (INT / EXT)	15 PSIA (INT / EXT)
6 DESIGN TEMPERATURE	-423° TO +100 °F	AMBIENT °F
7 OPERATING PRESSURE	100 PSIG (INT / EXT)	15 PSIA (INT / EXT)
8 OPERATING TEMPERATURE	-423° TO +100 °F	AMBIENT °F
9 CORROSION ALLOWANCE	SHELL 0 HEAD 0	SHELL 0 HEAD 0
10 MAP LIMITED BY	M.R. M1 @ 100 PSIG	— @ — PSIG
11 STRESS RELIEVING	PER CODE	PER CODE
12 RADIOGRAPHING	100 %	PER CODE
13 ALLOW STRESS @ DES. TEMP	15,150 PSI	15,150 PSI
14 JOINT EFFICIENCY	100%	—
15 ULTRA VIOLET LIGHT TEST	YES	NO
16 IMPACT TEST	YES	NO
17 MASS SPECTROMETER TEST	YES	YES
18 PNEUMATIC TEST AT	125 PSIG	—
19 MATERIAL SPECS.		
SHELL	SA 240 TP 304	SA 285 GR C PLM
HEADS	" " "	" " "
SUPPORTS	" " "	SA 283 OR BETTER
FLANGES	SA 182 GR F 304	SA 181 GR I
COUPLINGS	"	SA 182 GR F 304
PIPE NECKS	SA 312 TP 304	SA 53, 106 A OR B
BOLTS	SA 193 GR B8	SA 193 GR B7
NUTS	SA 194 GR 8	SA 194 GR 2H
INTERNALS	TYPE 304 S STL	
GASKETS	SOFT ALUMINUM	SEE NOTE 29
20 CAPACITY	105,000 GALS	94 LB
21 FABRICATION WEIGHT	BY FABRICATOR	BY FABRICATOR
22 EMPTY WEIGHT	" "	" "
23 OPERATING WEIGHT	" "	" "
24 TEST WEIGHT	" "	" "
25 PAINT	NONE	SEE NOTE 28
26 INSULATION	"	NONE
27 FIRE PROOFING	"	NONE

28 (1) PRIMER COAT ZINC CHROMATE EXTERIOR ONLY
29 F.F. FLANGES, TEFLON - O-RING, RUBBER
30
31 BOLT HOLES SHALL STRADDLE VESSEL ℄ & (UNLESS NOTED)
32 NOZZLES & MANWAYS SHALL BE DESIGNATED AS SHOWN.
33 MANWAYS TO HAVE HINGES UNLESS OTHERWISE NOTED
34 VESSEL SHALL BE THOROUGHLY CLEANED INSIDE AND OUTSIDE AND FREE FROM RUST SCALE SLAG WELD SPLATTER AND ALL FOREIGN MATTER.

NOZZLES AND COUPLINGS

ITEM	NO REQ	SIZE	RATING	FACING	SERVICE
F	1	10"	PIPE	STUB	FILL & LIQUID OUT
L_1	1	4"	150#	R.F	LIQUID LEVEL W/ BLIND FLG, STUDS, NUTS & GASKET
L_2	1	12"	SPECIAL	F.F.	LIQUID LEVEL W/ BLIND FLG, STUDS, NUTS & GASKET
M_1	1	24"	SPEC'L PRO TYPE	R.F	MANWAY W/ BLIND FLG, STUDS, NUTS, GASKET & HINGE
M_2	1	24"	SPEC'L VACUUM	O'RING	MANWAY W/ BLIND FLG, STUDS, NUTS, GASKET & HINGE
M_3	1	24"	SPEC'L VACUUM	O RING	MANWAY W/ BLIND FLG, STUDS, NUTS, GASKET & HINGE
P_3	1	12	150#	R.F	PRESSURIZING & VENT
V_1	1	8"	MRC	R.F	VACUUM
W	1	8"	—	—	BURSTING DISC
T_1 & T_2	2	1/4	3000#	CPLG	TEMPERATURE CONN
D	1	2"	150#	R.F	DRAIN W/ BLIND FLG, STUDS, NUTS & GASKET
V_2 & V_3	2	1	3000#	CPLG	VACUUM GAUGE CONN.

THE VESSEL FABRICATOR SHALL FURNISH ALL THE NECESSARY INSTRUMENTATION, PIPING, GAUGES, HIGH VACUUM PUMPS, MOTOR, LEVEL, TEMPERATURE INDICATORS, ETC. ETC. FOR THE VENTING & VACUUM SYSTEMS AS SPECIFIED IN SPECIFICATION # FA-6217
VENT & VACUUM EQUIPMENT SHALL BE PROTECTED FROM THE WEATHER IN A BUTTABLE CABINET (LOCATION TO FOLLOW)

1. PIPE STUB CONNECTION "F" TO BE BEVELLED AT 37½° WITH 1/16" LAND.

INNER VESSEL		OUTER VESSEL
0.812	SHELL THICK. IN.	0.562
"	HEAD THICK. IN.	0.500
NONE	CORR. ALLOW. IN.	NONE
100	MAX. OPER. PRESS. PSI	FULL VACUUM
-423° TO +100°F	MAX. TEMP. °F	AMBIENT
14,038	CAPACITY CU. FT.	
LH_2	SERVICE	VACUUM
SA 240 TP 304	MATERIAL	SA 285 C PLM
DATE INTO SERVICE	INSPECTOR	ITEM NO. V-H11

AETRON
CORINA, CALIFORNIA
DIVISION OF AEROJET GENERAL CORPORATION

LH_2 RUN TANK

SYM	DATE	DESCRIPTION	DRAWN	CHECKED	APPD
		REVISIONS			

AETRON
CORINA, CALIFORNIA
A DIVISION OF AEROJET GENERAL CORPORATION

LIQUID ROCKET PLANT — NIMBUS, CALIF.
TEST AREA — MECH.

LH_2 RUN VESSEL

SCALE
SPEC. NO. 6217
RELEASE DATE OCT 24 1962
DRAWING NO. FA-6189
SHEET 1 OF 3

Fig. IV-F-3, Vol. I

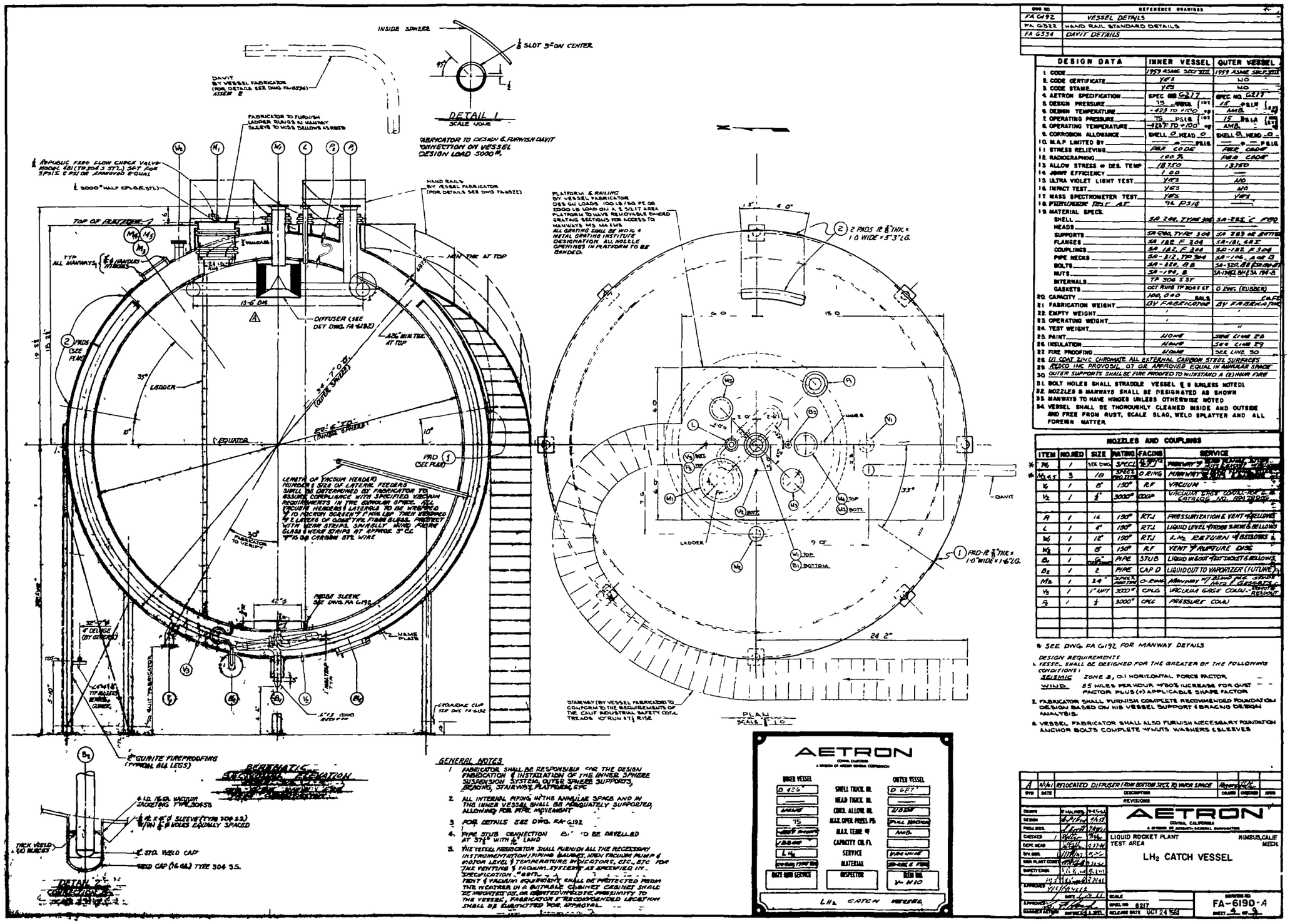

Fig. IV-F-4, Vol. I

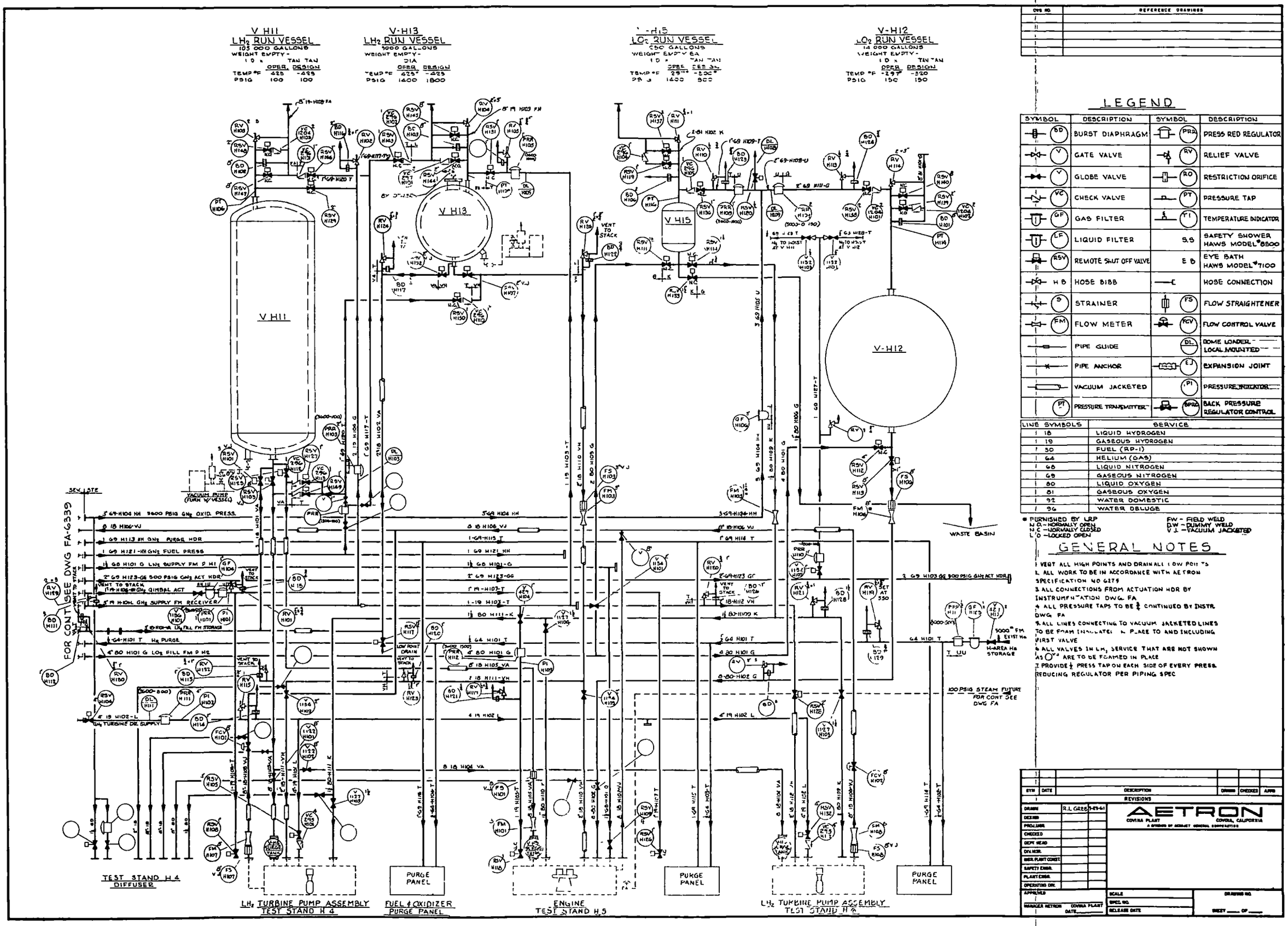

Flow Diagram, Test Stand H-4,5,6 Fig. IV-F-5, Vol. I

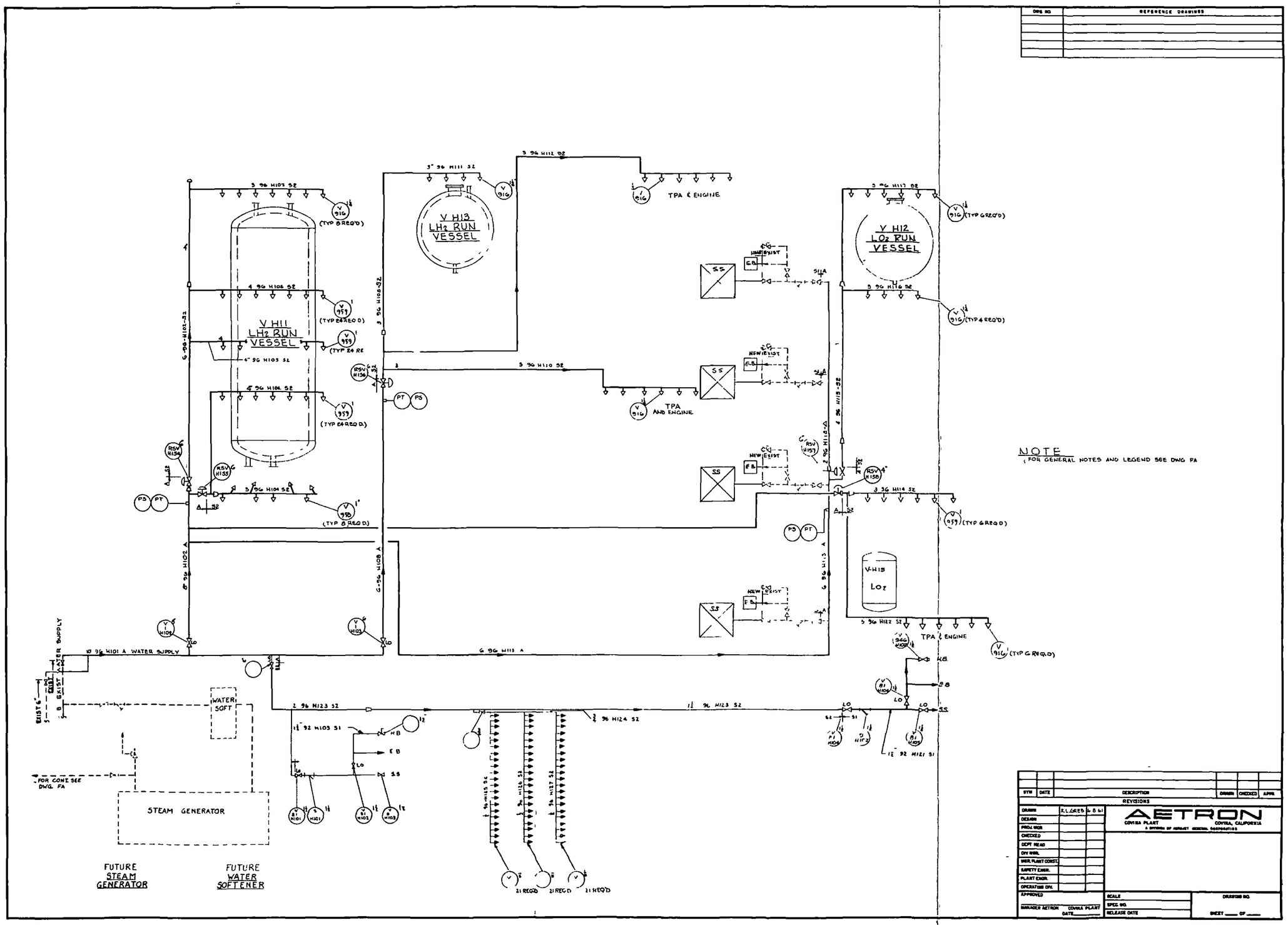

Flow Diagram (Deluge System) Test Stand H-4,5,6 Fig. IV-F-6, Vol. I

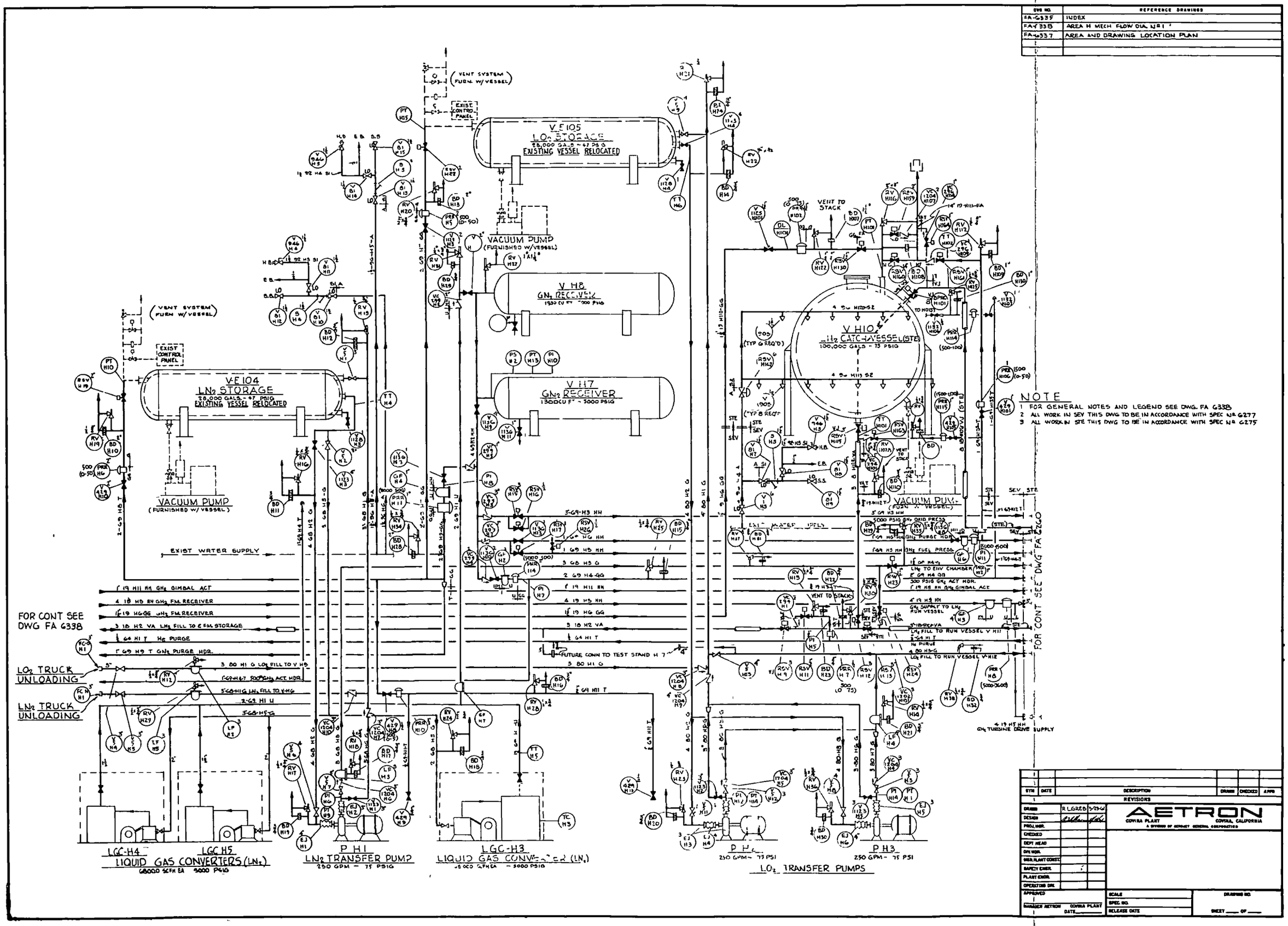

Flow Diagram (Storage and Catch) Test Stand H-4,5,6

Fig. IV-F-7, Vol. I

DWG NO	REFERENCE DRAWINGS
FA-6371	PLANT MAP & INDEX
FA-6376	PLAN VIEW
FA-6378	MISC SECTIONS, VIEWS & DETAILS
FA-6379	WEIGH BEAM DETAILS
FA-6380	CALIBRATION FRAME & DETAILS
FA-6381	MISC DETAILS

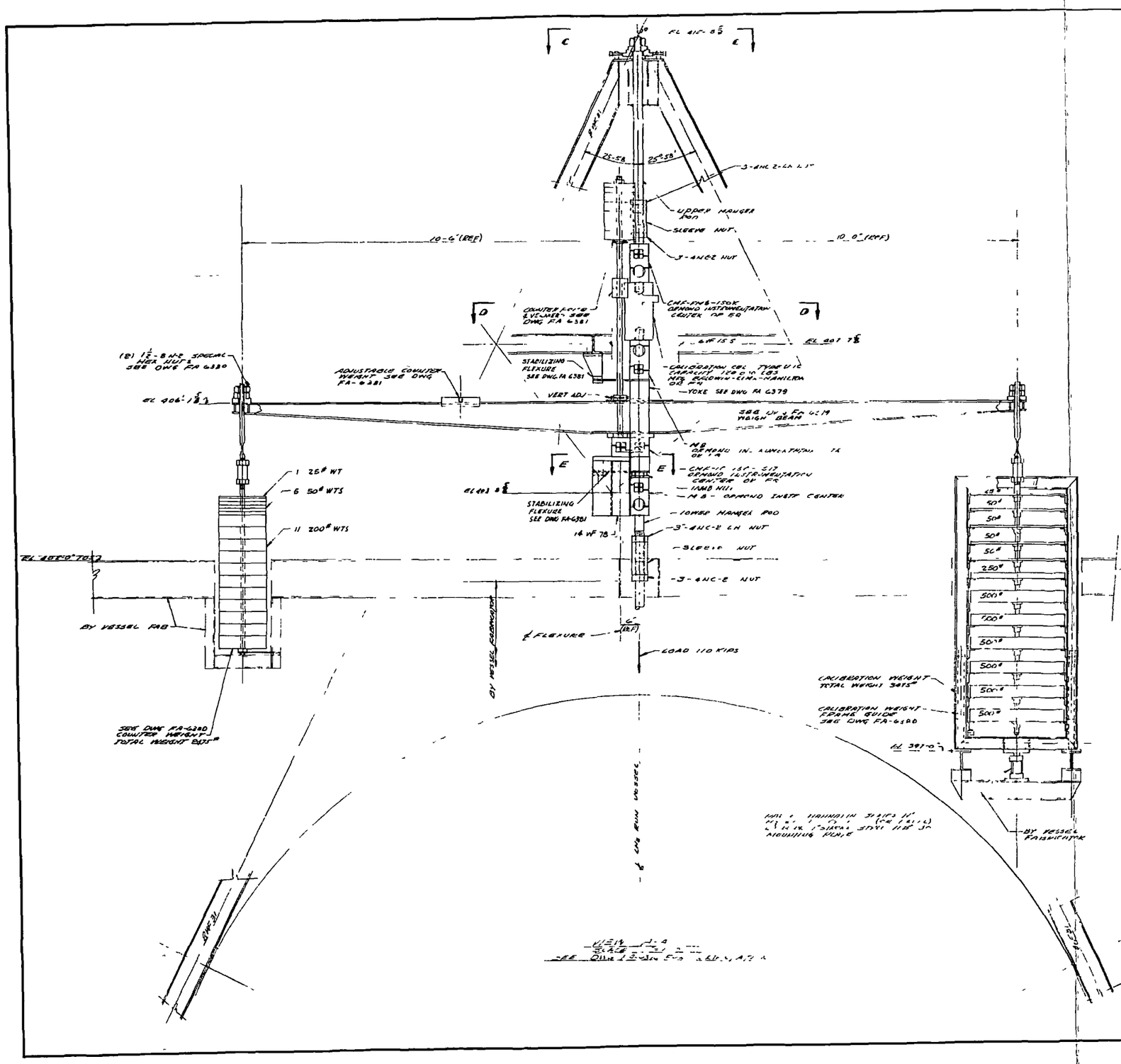

GENERAL NOTES UNLESS NOTED OTHERWISE

1- THE WEIGH SYSTEM FABRICATOR SHALL FURNISH THE LH2 RUN VESSEL CALIBRATION SYSTEM COMPLETE AS SHOWN ON THE DRAWINGS

2- THE ENTIRE WEIGH SYSTEM SHALL BE SHOP REASSEMBLED & TESTED IN ORDER TO INSURE PROPER ALIGNMENT & PERFORMANCE OF THE CALIBRATION UNIT BEFORE SHIPMENT TO THE FIELD

3- THE STRUCTURAL STEEL FRAME & BRACING SHALL BE FABRICATED PER AISC SPECIFICATIONS FOR BUILDING & BRIDGES & THE AWS SPECIFICATION FOR WELDING

4- ALL STRUCTURAL STEEL CONNECTIONS SHALL BE AISC STANDARD 90° CONNECTIONS (MODIFIED IF NECESSARY). FIELD SPLICES IF USED SHALL BE DESIGNED BY THE WEIGH SYSTEM FABRICATOR & SUBMITTED FOR APPROVAL

5- THE SIZE OF THE CALIBRATION WEIGHTS SHALL BE 1'-3" WIDE & 2'-6" LONG & SHALL BE OF NICKEL STEEL. THESE WEIGHTS SHALL BE CALIBRATED & STAMPED WITH ITS RESPECTIVE WEIGHT. THE COUNTER-WEIGHTS & THE COUNTER-POISE WEIGHTS SHALL BE OF CARBON STEEL OR CAST IRON & SHALL BE STAMPED WITH ITS RESPECTIVE WEIGHT

6- PAINT ALL STRUCTURAL STEEL (INCLUDING WEIGH BEAM & CARBON STEEL COMPONENTS OF THE WEIGH SYSTEM (EXCLUDING CELL, FIXTURES ETC) WITH ONE (1) SHOP COAT OF ZINC CHROMATE PRIMER PER SPEC MIL-P 8585A

PAINT CALIBRATION UNIT INCLUDING WEIGH BEAM (EXCLUDING STAINLESS STEEL COMPONENTS) WITH ONE (1) FIELD COAT OF RED PAINT PER FEDERAL SPEC TT-E-489. PAINT STRUCTURAL STEEL FRAME WITH ONE (1) FIELD COAT OF GREEN PAINT PER FEDERAL SPEC TT-E-489

SYM	DATE	DESCRIPTION	DRAWN	CHECKED	APPR

REVISIONS

DRAWN
DESIGN
PROJ ENGR.
CHECKED
DEPT HEAD
DIV ENGR.
MGR. PLANT CONST.
SAFETY ENGR.
PLANT ENGR.
OPERATING DIV.
APPROVED
SANDERS AETRON COVINA PLANT DATE

AETRON
COVINA PLANT COVINA, CALIFORNIA
A DIVISION OF AEROJET GENERAL CORPORATION

SCALE
SPEC NO.
RELEASE DATE
DRAWING NO
SHEET ___ OF ___

Fig. IV-F-8, Vol. I

Calibration and Weigh System,
LH_2 Run Vessel, Test Stands H-4,5,6

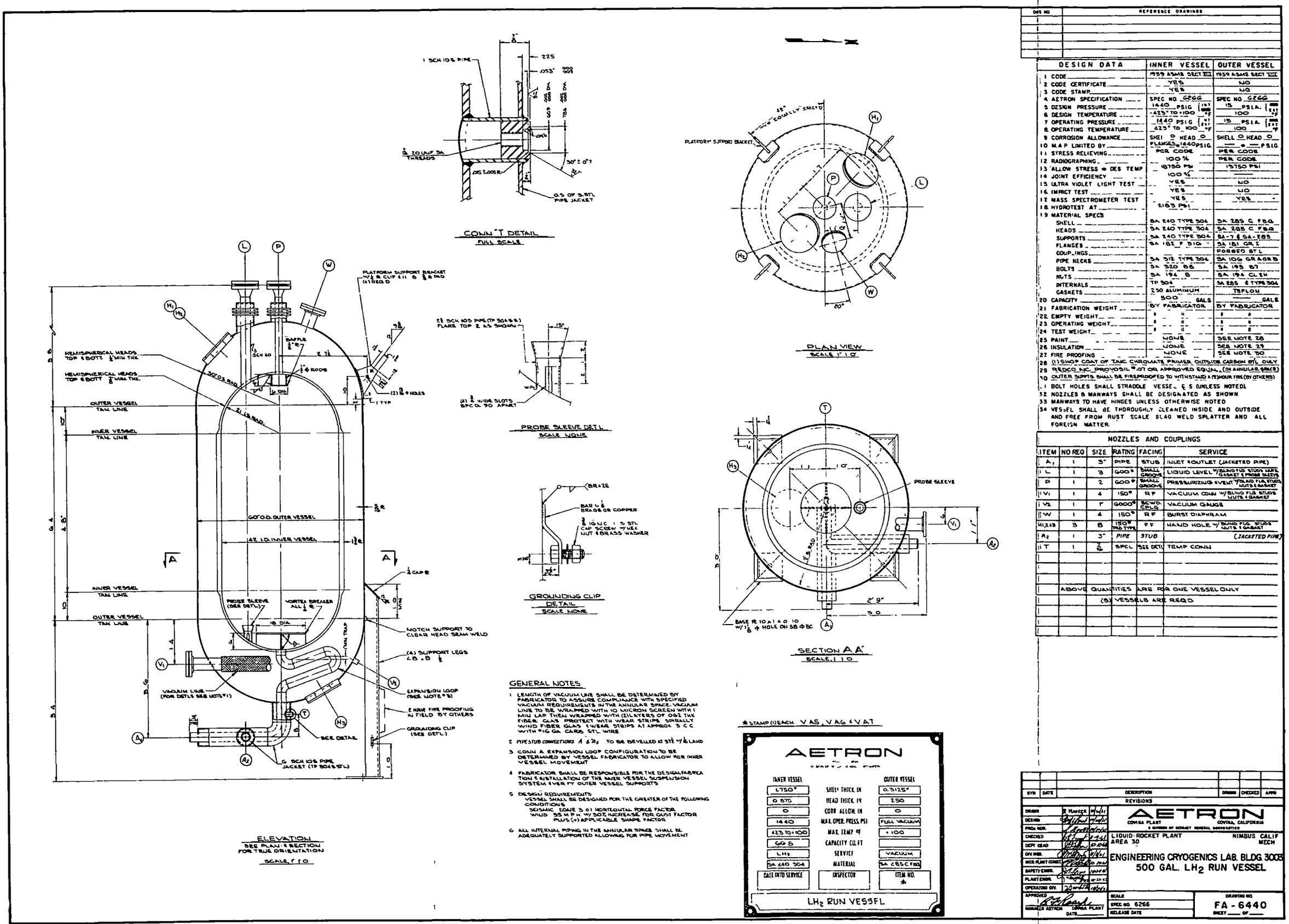

Fig. IV-F-9, Vol. I

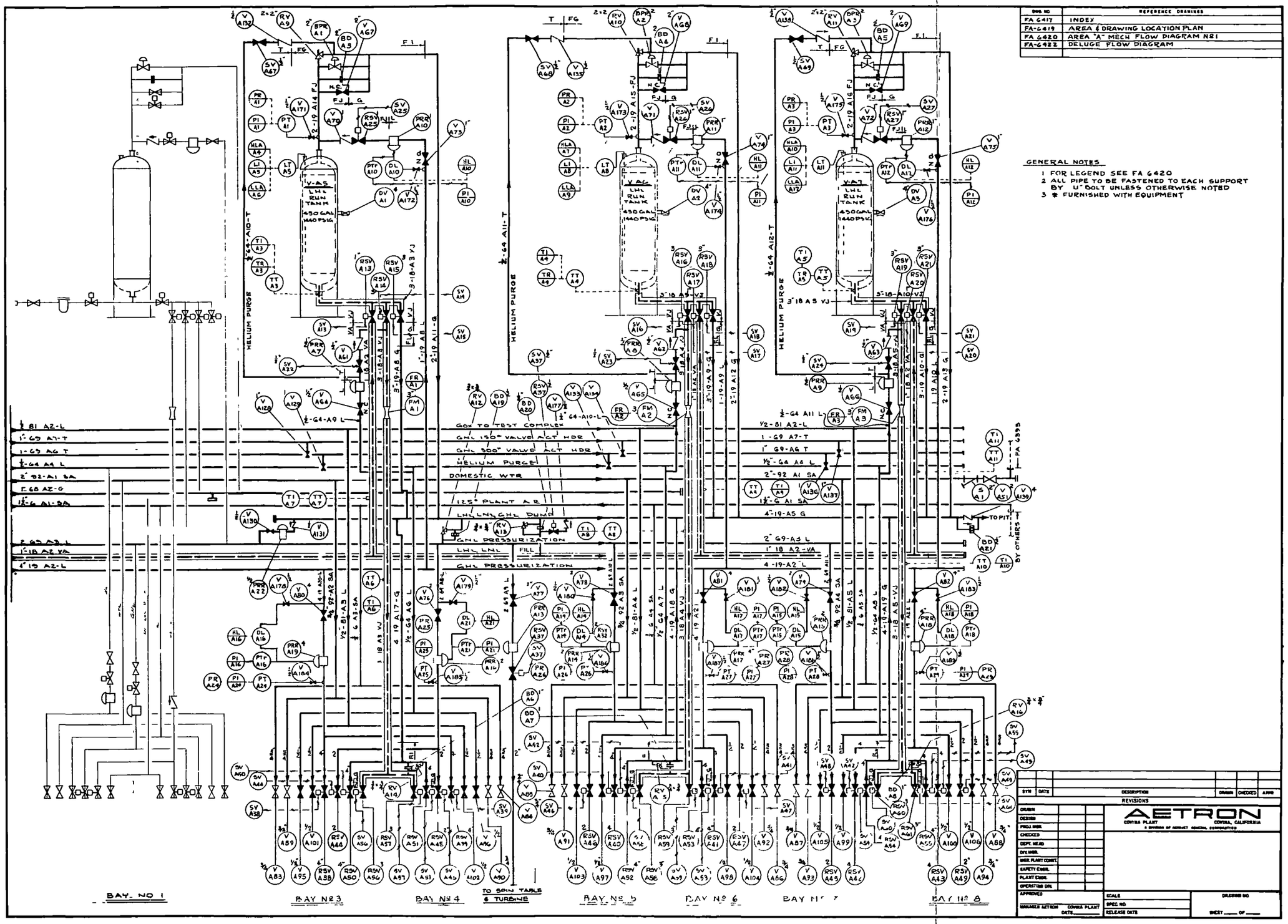

Flow Diagram, Cryogenics Lab. Fig. IV-F-10, Vol. I

DWG. NO	REFERENCE DRAWINGS
FA6392	AREA PLOT PLAN
FA6394	SECTIONS & DETAILS
FA6396	WATER DISTRIBUTION DETAILS
FA6397	SEWAGE DISPOSAL DETAILS
FA6410	POWER DISTRIBUTION DETAILS
FA6400	FLOOR PLAN & SECTIONS
FA6409	DRAINS PIPING PLAN & DETAILS
FA6461	VESSEL FOUNDATIONS & SLEEPER SCHEDULE
FA6454	DUMP LINE PIPING PLAN & DETAILS
FA6450	TEST FACILITIES LOWER PIPING PLAN
FA6401	FOUNDATION PLAN & SECTIONS

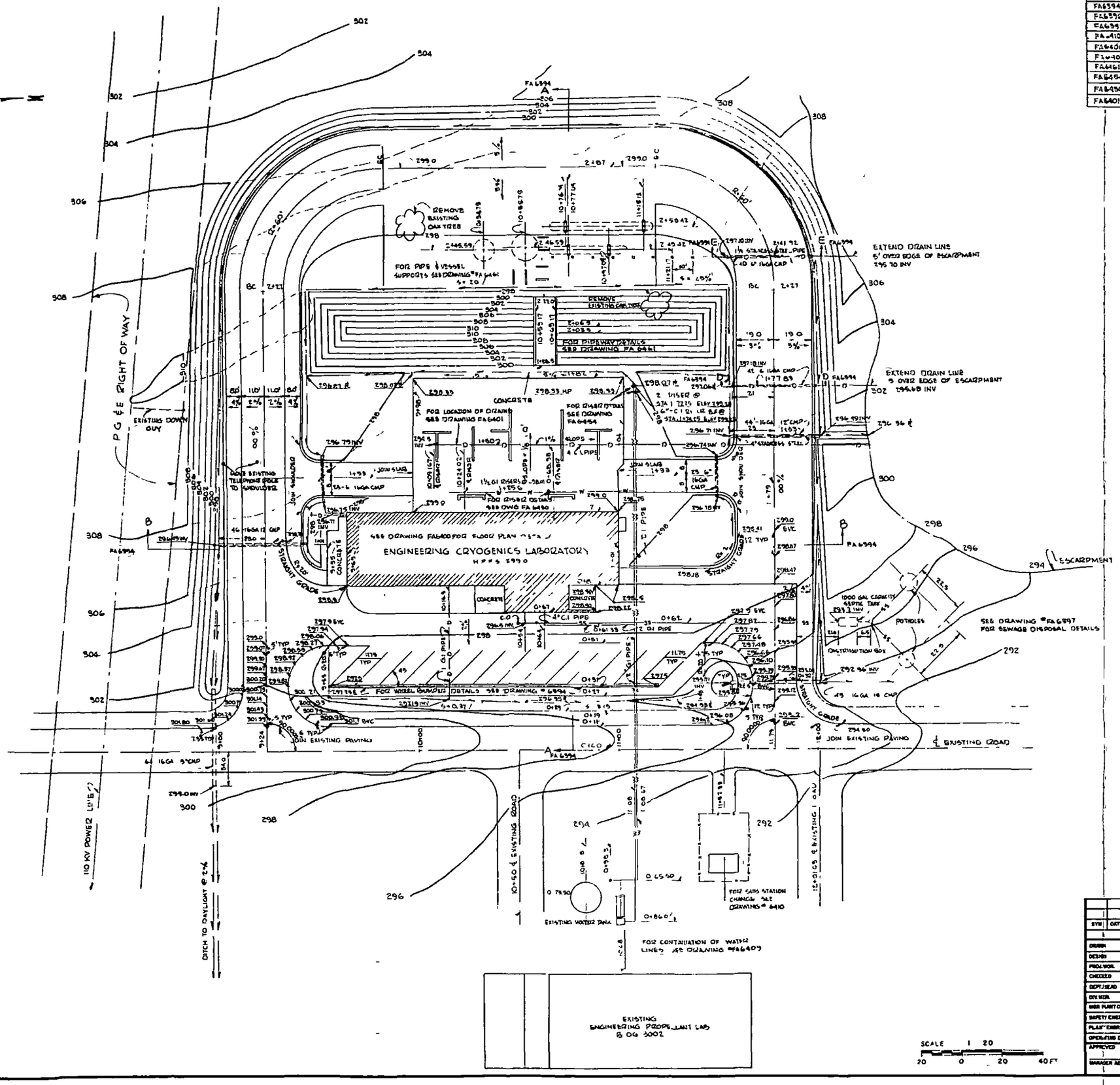

SYM	DATE	DESCRIPTION	DRAWN	CHECKED	APPR
		REVISIONS			

AETRON
COVINA PLANT COVINA, CALIFORNIA
A DIVISION OF AEROJET GENERAL CORPORATION

LIQUID ROCKET PLANT
ENG CRYOGENICS LAB.
NIMBUS, CALIF
CIVIL

PLOT PLAN

SCALE
SPEC. NO. 6262
RELEASE DATE

DRAWING NO. FA-6393
SHEET ___ OF ___

Fig. IV-F-11, Vol. I

DWG NO	REFERENCE DRAWINGS
FA 6410	INDEX
FA 6391	PLANT MAP
FA-6398	ELEVATIONS
FA 6399	FINISH & DOOR SCHEDULES
FA 6402	ROOF PLAN & SECTIONS
FA-6403	WALL SECTIONS & DETAILS
FA 6408	PLUMBING PLAN & ISOMETRIC

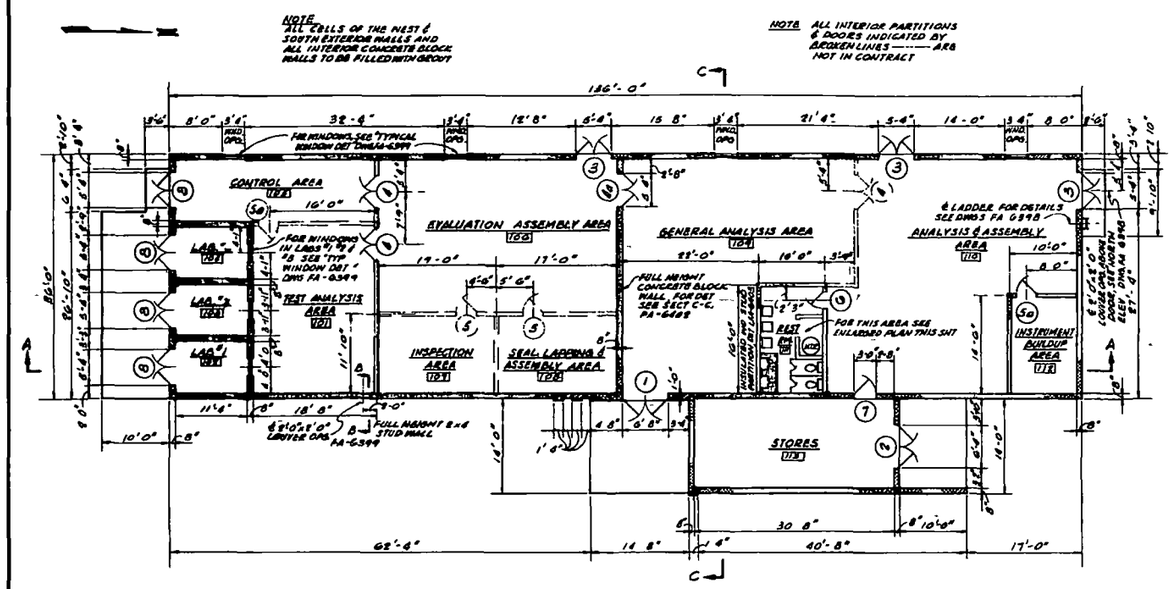

FLOOR PLAN
SCALE: 1/8"=1'-0"

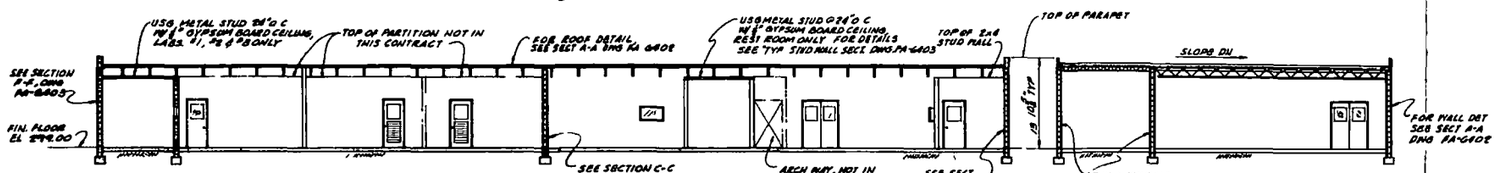

SECTION A-A
SCALE 1/8"=1'-0"

SECTION C-C
SCALE: 1/8"=1'-0"

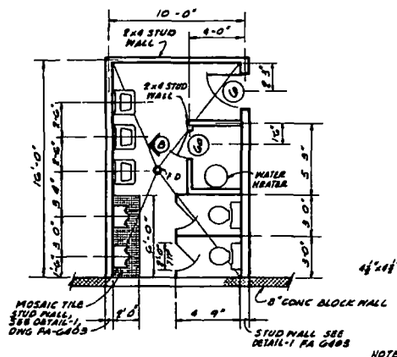

REST ROOM FLOOR PLAN
SCALE: 1/4"=1'-0"

NOTE: FOR PLUMBING EQUIPMENTS SEE DWG FA-6408

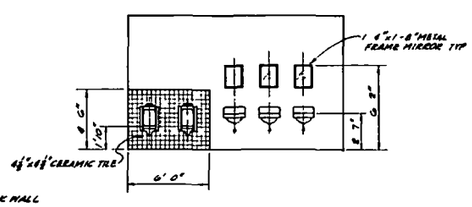

ELEVATION B
SCALE: 1/4"=1'-0"

SCALE 1/8" = 1 - 0"
8 0 8 16 FT

SCALE 1/16" = 1 - 0"
4 0 4 8 FT

GENERAL NOTES

1. ALL CONSTRUCTION & DESIGN SHALL CONFORM TO UNIFORM BUILDING CODE (LATEST EDITION) & TO AETRON SPECIFICATION NO
2. CONTRACTOR SHALL VERIFY ALL CONDITIONS @ JOB SITE PRIOR TO BID SUBMITTAL & SHALL VERIFY ALL DIMENSIONS PRIOR TO START OF ANY PHASE OF CONSTRUCTION
3. OBTAIN BENCH MARK CONTROL ELEVATION & BUILDING LOCATION FROM RESIDENT ENGINEER
4. CONCRETE SHALL HAVE COMPRESSIVE STRENGTH OF 2000 P.S.I @ 28 DAYS
5. REINFORCING SHALL BE DEFORMED BAR OF INTERMEDIATE GRADE BILLET STEEL HAVING AN ALLOWABLE STRESS OF 20 000 P.S.I
6. CONCRETE BLOCKS SHALL BE LIGHTWEIGHT LOAD BEARING UNITS CONFORMING TO A.S.T.M. C 90. BLOCKS SHALL BE LAID WITH FULL BED & SHOVED HEAD JOINTS. FILL ALL CELLS BELOW FLOOR LINE
7. GROUT ALL BLOCK CELLS RUNNER BOLTS ANCHORS & REINF. BARS OCCUR. STOP GROUT 1½" BELOW TOP BLOCK COURSE TO FORM KEY. UNLESS OTHERWISE DETAILED PROVIDE A MIN. OF 2-#4 BARS ALL AROUND EACH OPENING WITH BARS EXTENDING 2'-0" BEYOND SUCH OPENINGS IN ALL DIRECTIONS. PLACE 2-#4 BARS (VERTICALLY) @ ALL CORNERS & INTERSECTING BLOCK WALLS. #9 GA WALL MESH REINFORCING SHALL BE PLACED BETWEEN MASONRY COURSES @ 2'-0" O.C.
8. STRUCTURAL STEEL SHALL CONFORM TO A.I.S.C. PRACTICE. ALL CONNECTIONS NOT SHOWN SHALL BE EQUIVALENT TO A TWO ½" BOLT CONNECTION
9. ALL WELDING SHALL CONFORM TO THE "CODE FOR ARC AND GAS WELDING IN BUILDING CONSTRUCTION" OF THE AMERICAN WELDING SOCIETY UNLESS NOTED OTHERWISE
10. ALL EXTERIOR & EXIT DOORS SHALL BE OPENABLE FROM THE INSIDE WITHOUT KEY OR SPECIAL KNOWLEDGE OR EFFORT
11. ACTUAL MASONRY OPENING DIMENSIONS OF DOORS ARE ½" GREATER THAN DIMENSIONS SHOWN ON FOUNDATION & FLOOR PLANS
12. ALL FOOTINGS TO BEAR ON FIRM UNDISTURBED SOIL
13. FOR OPENINGS IN WALLS FOR HEATING & AIR CONDITIONING SEE DWG FA-6407. ALL EXTERIOR DUCT OPENINGS SHALL BE FLASHED WEATHER TIGHT
14. ALL BOLTS ANCHORS PIPE SLEEVES ETC INSERTED IN THE BLOCK WALL SHALL BE SOLID GROUTED IN PLACE
15. FOR SIZE & LOCATION OF PIPE SLEEVES IN BLOCK WALL SEE DWGS FA-6408, FA 6404 & FA 6405
16. CHAMFER EXPOSED CONCRETE CORNERS & RE-ENTRANT CORNERS ½"x45° UNLESS NOTED

SYM	DATE	DESCRIPTION	DRAWN	CHECKED	APPR
		REVISIONS			

DRAWN	M MICHAS	10-20-61
DESIGN		10-20-61
PROJ MGR.		10-20-61
CHECKED		
DEPT HEAD		11-8-61
DIV MGR.		
MGR PLANT CONST.		
SAFETY ENGR.		11-8-61
PLANT ENGR.		
OPERATING DIV.		
APPROVED		
MANAGER AETRON	COVINA PLANT DATE	

AETRON
COVINA PLANT — COVINA, CALIFORNIA
A DIVISION OF AEROJET GENERAL CORPORATION

LIQUID ROCKET PLANT — NIMBUS CALIF.
ENG CRYOGENICS LAB. — ARCH

FLOOR PLAN & SECTIONS

SCALE
SPEC NO 6262
RELEASE DATE

DRAWING NO FA-6400
SHEET ___ OF ___

Fig. IV-F-12, Vol. I

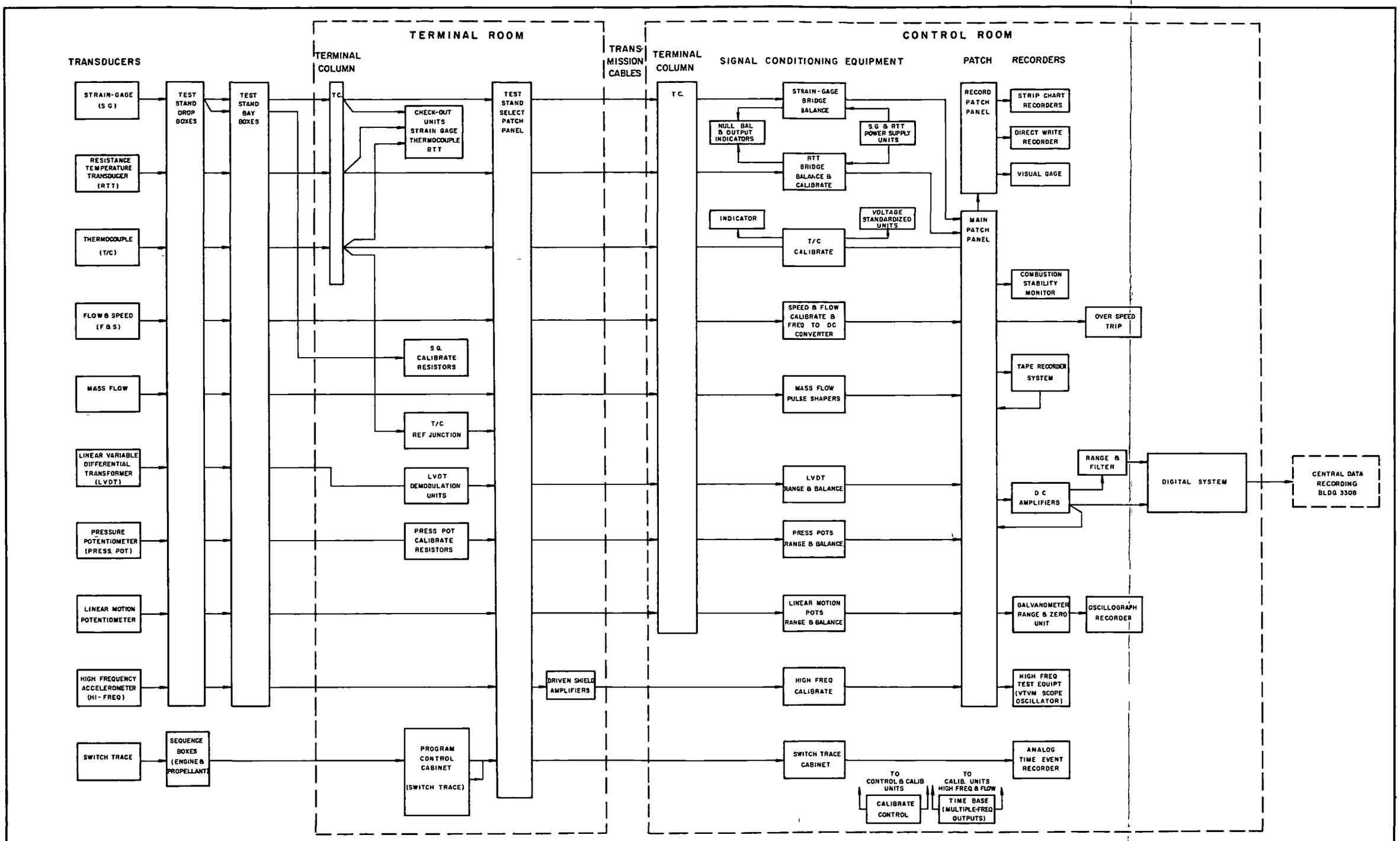

ACQUISITION CAPABILITY

TEST STAND H-4		TEST STAND H-5		TEST STAND H-6	
108	STRAIN GAGE	108	STRAIN GAGE	48	STRAIN GAGE
24	RTT	24	RTT	24	RTT
60	THERMOCOUPLE	60	THERMOCOUPLE	36	THERMOCOUPLE
12	F & S	12	F & S	12	F & S
2	MASS FLOW	2	MASS FLOW	2	MASS FLOW
12	LVDT	12	LVDT	12	LVDT
24	PRESS POTS	24	PRESS POTS	12	LINEAR MOTION
12	LINEAR MOTION	12	LINEAR MOTION	12	HIGH FREQ
12	HIGH FREQ	12	HIGH FREQ		

Fig. IV-F-13, Vol. I

CONTROL BLDG		TERMINAL ROOM	
1	F.F. & PICTORIAL CONTROL	1	T/C REF
2	SANBORN RECORDER	2	T/C REF.
3	SPARE	3	T/C REF.
4	VIS GAGE	4	S.G. CALIB.
5	VIS GAGE	5	S.G. CALIB
6	STRIP CHART REC (SM. SING.)	6	SPARE
7	STRIP CHART REC. (SM. SING.)	7	SPARE
8	STORAGE AREA READOUT	8	MISC CONTROL
9	STRIP CHART REC. (LG. SING.)	9	COMM PROR CONTROL
10	STRIP CHART REC (LG. SING.)	10	H-6 SEQ CONTROL
11	STRIP CHART REC (LG. SING.)	11	H-5 SEQ CONTROL
12	STRIP CHART REC (LG. SING.)	12	H-4 SEQ CONTROL
13	STRIP CHART REC (DUAL)		
14	STRIP CHART REC (DUAL)		
15	TIME INTERVAL		
16	SWITCH TRACE		
17	SWITCH TRACE		
18	T/C CHECK		
19	S.G. CHECK		
20	TRANS PATCH TERM		
21	TRANS. PATCH		
22	S.G. PWR SUPPLY		
23	S.G. & RTT PWR SUPPLY		
24	S.G. BALANCE		
25	S.G. BALANCE		
26	SPARE		
27	FLOW CAL & T/C TEST		
28	LVDT & FLOW		
29	SPARE		
30	RECORD PATCH TERM		
31	RECORD PATCH		
32	AMPL		
33	AMPL		
34	AMPL		
35	FILTERS & RANGE		
36	SPARE		
37	SPARE		
38	SPARE		
39	DIGITAL SYSTEM (COM'L)		
40 THRU 44	TAPE SYSTEM (COM'L)		
45	STORAGE		
46	STORAGE		
47	STORAGE		
48	OST & CSM		
49	HIGH FREQ		
50	OSC		
51	STORAGE		
52	STORAGE		
53	STORAGE		

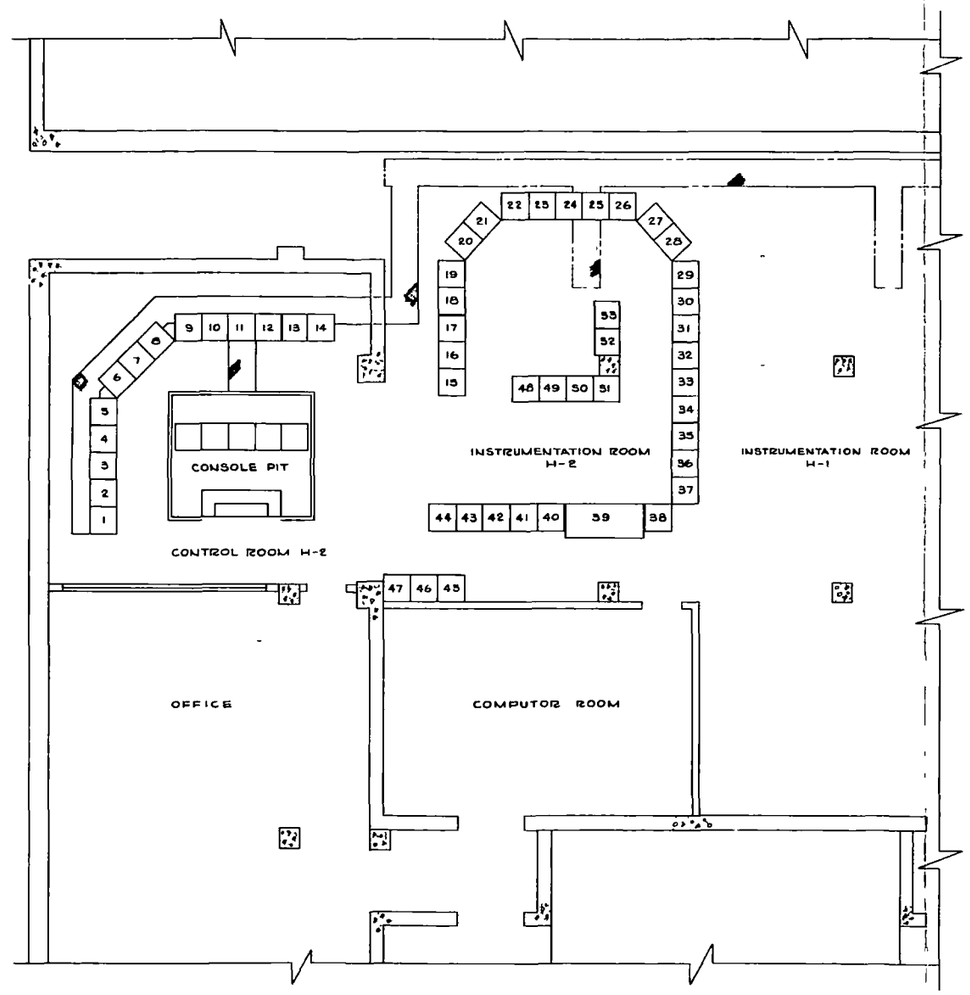

PLAN—CONTROL BLDG

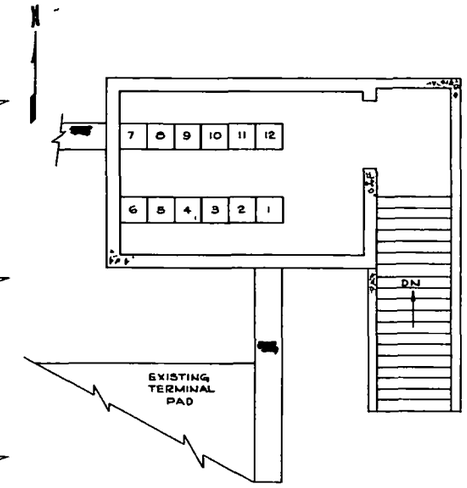

PLAN—TERMINAL ROOM

Fig. IV-F-14, Vol. I

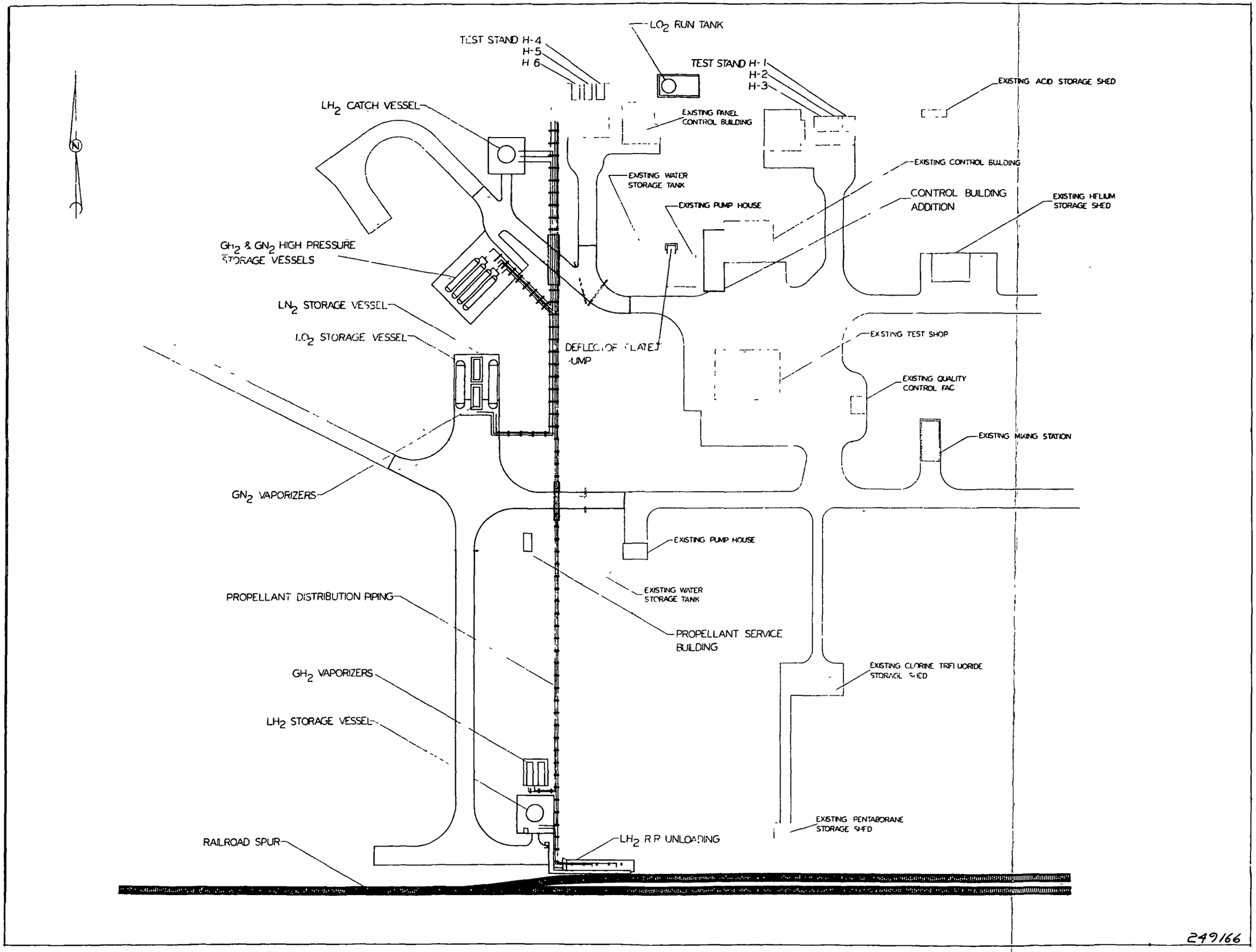

Plot Plan H Area Facilities

Fig. IV-F-15, Vol. I

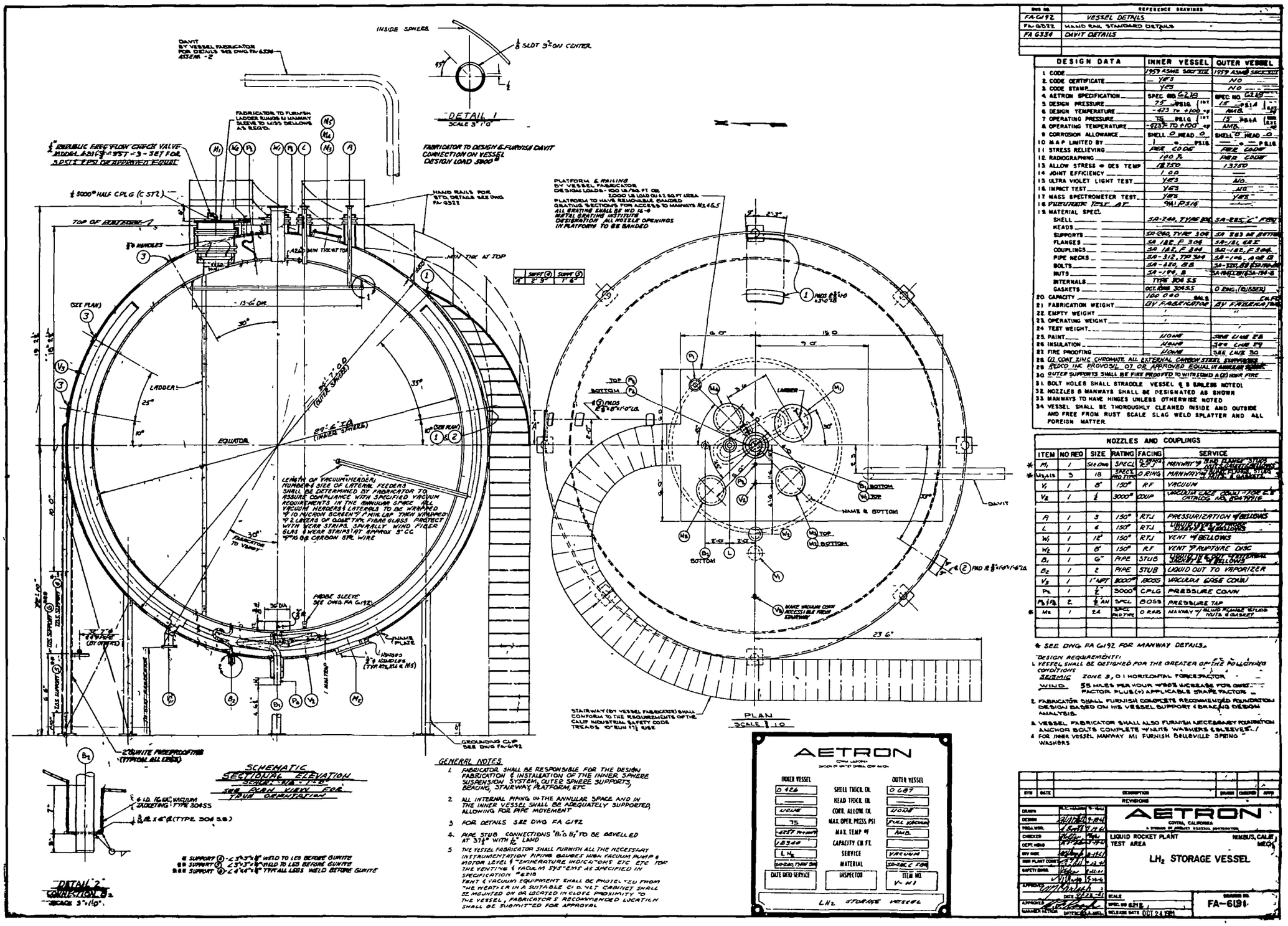

Fig. IV-F-16, Vol. I

Fig. IV-F-17, Vol. I

Analog Computer Facility

2. Special Test Equipment

a. General Considerations

The research and development program that must be pursued to produce an operational nuclear rocket engine requires extensive engineering research, laboratory, and development test facilities, and special test equipment. The facilities and equipment (exclusive of a full-scale nuclear testing capability) currently available at Aerojet-General Corporation's several plant locations are described in detail in Vol. XIV, Facilities and Equipment, of Proposal VE-61003, and in Westinghouse Laboratories' original proposal.

The many unique aspects of the NERVA development program, however, have necessitated the design and provisioning of facilities and equipment to modify and augment those already available.

Contract Task 5 has been established to allow for the design, procurement, and installation of a portion of these new special test equipment requirements. Specifically, Task 5 includes that Special Test Equipment (STE) required to support the non-nuclear research and development test programs in accordance with the test facilities utilization chart shown in Section III, A, above.

As described in the discussion to follow, procurement of STE committed during the Phase I time period (11 July 1961 through 10 January 1962) in advance of contractual funding is included as part of the Task 5 requirements.

Additional NERVA special test equipment, items requiring design and procurement during 11 January 1962 through 30 September 1962, are also presented for contractual coverage under Task 5.

b. Discussion

The overall time schedule for the NERVA program requires that facilities and special test equipment be designed and provisioned at the earliest practicable date. Realizing the long procurement times associated with many of the required facilities and equipment, a special category of long-lead procurement items has been established.

IV Technical Discussion, F (cont.)

Moreover, a comprehensive design effort has been initiated to establish preliminary test facility and STE criteria. This effort has as its specific goal the delineation of all time-critical facility and STE items necessitating long-lead procurement action. Detailed design of these items and bid package preparation have been pursued to prepare Aerojet for an immediate procurement capability of all defined long-lead procurement items. This procurement action, initiated during the present contract term, was necessary to assure timely availability of the modified and augmented, primary NERVA non-nuclear test stands H-4, 5, 6.

Informal discussions by Aerojet with SNPO-Washington and SNPO-Cleveland, in September 1961, re-emphasized the necessity for STE design and initiation of procurement beginning in October 1962, in advance of contractual funding, to maintain the NERVA research and development schedule. Based on discussions involving review of specific lists of STE categorized as long-lead or normal procurement, and on a tentative appraisal and endorsement by SNPO-Cleveland that the equipment requested was required to maintain NERVA development schedules, Aerojet-General has proceeded to authorize a commitment of $1,271,000 in advance of contractual funding for design and procurement of long-lead STE in support of the NERVA program.

c. Description

The special test equipment requirements presented for contractual coverage in the NERVA program period through 30 September 1962 are delineated under the Technical Administrative Documents for Tasks 5.1, 5.2, 5.3, 5.7, and 6.1, in Volume II of this proposal.

Figures IV-F-1 through IV-F-17 are included to assist the reader in better understanding the nature, application, and purpose of the required STE items.

In Aerojet-General's original Proposal VE-61003, Volume XIV, many of the STE requirements were anticipated and described (see Table V-3 of that proposal). In the course of the present contract term, a more detailed study of these requirements has been pursued. Based upon this study (which considered the most recent, definitized, technical program requirements) additional special test equipment requirements have been developed and are included in the Technical Administrative Documents 5.1, 5.2, 5.3, 5.4, and 5.7.

IV Technical Discussion, F (cont)

In comparing the STE items of this proposal to those presented in the recently revised STE lists submitted to SNPO-Washington and SNPO-Cleveland for informal technical review, it will be noted that the requirements herein presented, have remained essentially unchanged. They do, however, include the additional requirements based on present program plans. In particular, the requirements shown for Test Zone "C", Test Stand C-6B were not defined until the specific testing programs planned for the NERVA turbopump and the Generation II simulator were defined.

The STE identified with Technical Administrative Documents, Tasks 5.1, 5.2, 5.3 and 5.7 assume future program developments will not require activation of Test Zone H until July 1963. This assumption could very seriously delay program schedules should development break-throughs demand availability of Test Zone H in January 1963. This latter, we believe, is a more reasonable and conservative assumption for establishing a sound development effort for the NERVA Program. Accordingly, the STE associated with technical Administrative Document Task 6.1 has been included in this proposal as an alternate approach to indicate what additional equipment would be required in the period through September 1962 to obtain activation of Test Zone H by January 1963.

The Engineering Cryogenics Laboratory planned for construction and utilization at the LRP, for the NERVA Program, was not originally described in Aerojet-General's Proposal VE-61003. The need for such a facility was generally recognized at the time of the initial proposal submittal. However, design concepts were not complete and it was therefore deemed advisable to omit the laboratory from the proposal, deferring submittal until more definitized program requirements could be described and a significant design activity described. The most recent STE requirements conveyed for informal review to SNPO-Washington and SNPO-Cleveland, considered the specific STE needs of this laboratory. These needs are now presented for contractual coverage in Task 5.2. The Engineering Cryogenics Laboratory building has approximately 3,000 square feet of floor area, with provisions for precision assembly, inspection, bearing and seal lapping, and material testing. Space has also been provided for a stockroom where essential supplies and parts will be kept on hand.

The precision assembly, inspection, and bearing and seal lapping areas are temperature-controlled to ensure accuracy and repeatability of measurements. Analysis, assembly, disassembly, and inspection are as important to components development as the evaluation itself. Sufficient inspection and assembly equipment will be on hand to

enable these functions to be properly performed, both surface inspection equipment as well as high accuracy dimensional equipment being essential.

Separate areas have been provided for testing and evaluation of metallic and non-metallic materials. Tensile, hardness, and fatigue testers will be located in these areas. An impact tester will be located outside the building on a concrete slab. The laboratory will have the capabilities of obtaining mechanical properties of materials over temperatures ranging from ambient to -420°F. The specimens will be subjected to actual propellant environment under simulated engine service conditions.

The test complex contains three sub-complexes, each having a 450-gallon LH_2 run tank, two test bays share each run tank. Blast walls separate the run tanks from the bays. Each bay will have the capability for testing with LH_2, GH_2, LN_2, or GN_2. LN_2 followed by a GHe purge, will be used to pre-chill the system to conserve the LH_2. The run tanks will supply LH_2 to the bays at pressures up to 1500 psi. Short duration (20 sec) flow rates of LH_2 can be obtained up to 20 lb/sec. GH_2 will be supplied to the bays with a flow rate of 6.0 lb/sec at 650 psi. A heat exchanger will be provided which can be moved into position as required for testing hot-gas components.

Also included as a new requirement is an expansion of the analog equipment transferred from the ANP program to the NERVA program during Phase I. The expansion, as described in Technical Administration Document 5.4, will increase the accuracy of this equipment to be more consistent with NERVA analytical requirements, as well as to replace some of the components which must be removed for use in the Generation II simulator program. It is planned that further expansion will be required after 30 September 1963.