CENTAUR STANDARD SHROUD (CSS) TESTS

I. STRUCTURAL LOAD TEST
- A. CSS LOADS
  1. TEST TO FLIGHT ULTIMATE LOADS, 2 AXES
  2. DETERMINE CENTAUR LOAD SHARING
- B. SPACECRAFT LOADS
  1. TEST TO FLIGHT ULTIMATE LOADS, 2 AXES
  2. COMBINE WITH CSS LOADS, 2 AXES

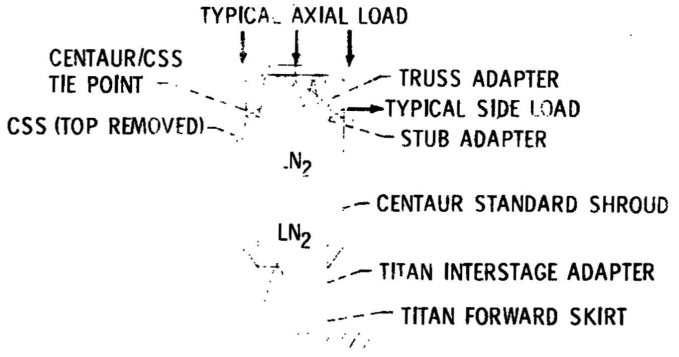

II. CRYOGENIC TESTS
- A. HEAT TRANSFER
  1. DETERMINE BOILOFF RATES FOR GROUND HOLD
- B. VENT
  1. VERIFY VENT SYSTEM CAPACITY
- C. UNLATCH
  1. VERIFY SATISFACTORY SEPARATION
  2. DETERMINE SEPARATION LOADS
  3. VERIFY CLEARANCES

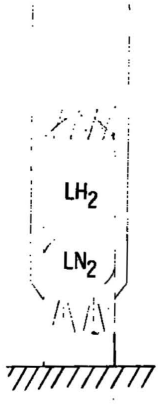

III. JETTISON TESTS
- A. SEA LEVEL
  1. DETERMINE STRUCTURAL FLEXING
  2. DETERMINE HINGE RELEASE BEHAVIOR AND LOADS
  3. MEASURE SEA LEVEL TRAJECTORY (CALCULATE ALTITUDE TRAJECTORY)
- B. ALTITUDE
  1. SAME AS FOR "SEA LEVEL," EXCEPT MEASURE ALTITUDE TRAJECTORY

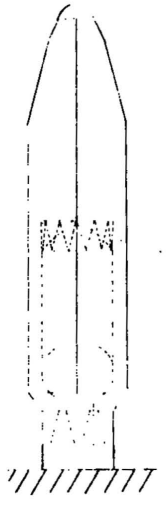

CSS TESTING AT PLUM BROOK B-3

ADVANTAGES

1. EXISTING EQUIPMENT
   - A. SUITABLE BASIC TEST STAND AND ASSEMBLY AREAS
   - B. LH_2 AND LN_2 FILL AND VENT, GH_2 BURNER
   - C. HYDRAULIC, GHe, GN_2 SYSTEMS
   - D. 400-CHANNEL DATA SYSTEM
2. EXPERIENCED MANPOWER AVAILABLE (BASED ON KNOWN TEST PROGRAMS)
3. ENGINEERS AND TECHNICIANS KNOW CENTAUR (MINIMUM GD/C SUPPORT NEEDED)
4. EASY TO MONITOR AND TO REVISE TEST PLANS

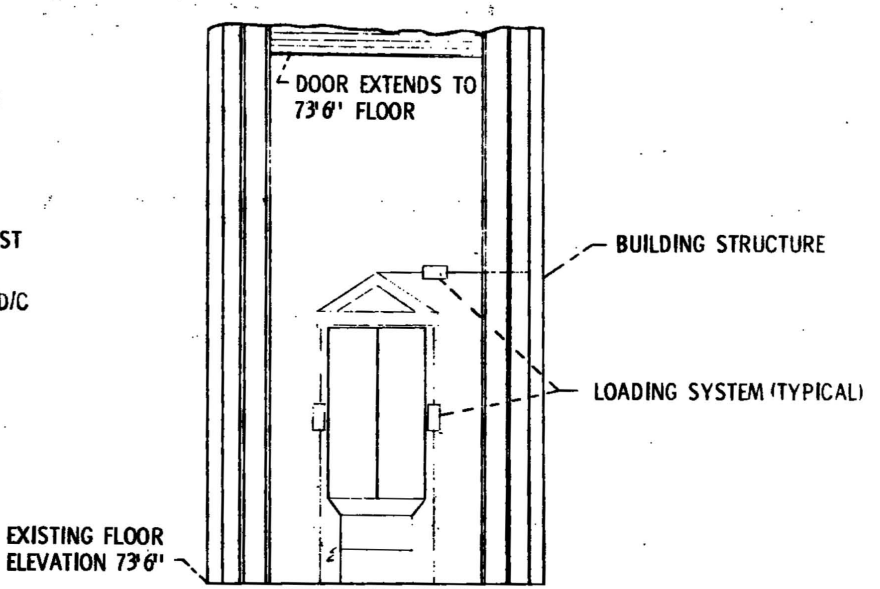

STRUCTURAL TESTS
B-3 FACILITY

DISADVANTAGE

1. MUST ADD NETS FOR JETTISON TESTS

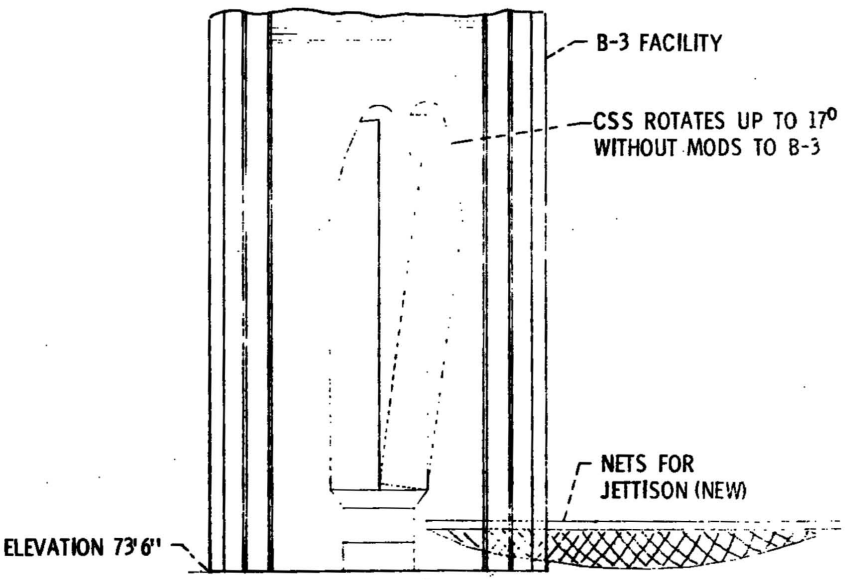

CRYOGENIC & JETTISON TEST

CSS TESTING AT PLUM BROOK SPF

ADVANTAGES

1. EXISTING EQUIPMENT
   A. SUITABLE BASIC JETTISON TEST STAND (FROM SATURN SHROUD TESTS)
   B. LN_2 FILL AND VENT SYSTEM
   C. 250-CHANNEL DATA SYSTEM
2. ALTITUDE CAPABILITY
3. EASY TO MONITOR AND TO REVISE TEST PLANS

DISADVANTAGES

1. NO EXISTING STRUCTURAL TEST STAND
2. LH_2 SYSTEM PROBLEMS
   A. SAFETY IN VACUUM CHAMBER
   B. LONG LINES
   C. NO EXISTING CONTROLS OR VENTS

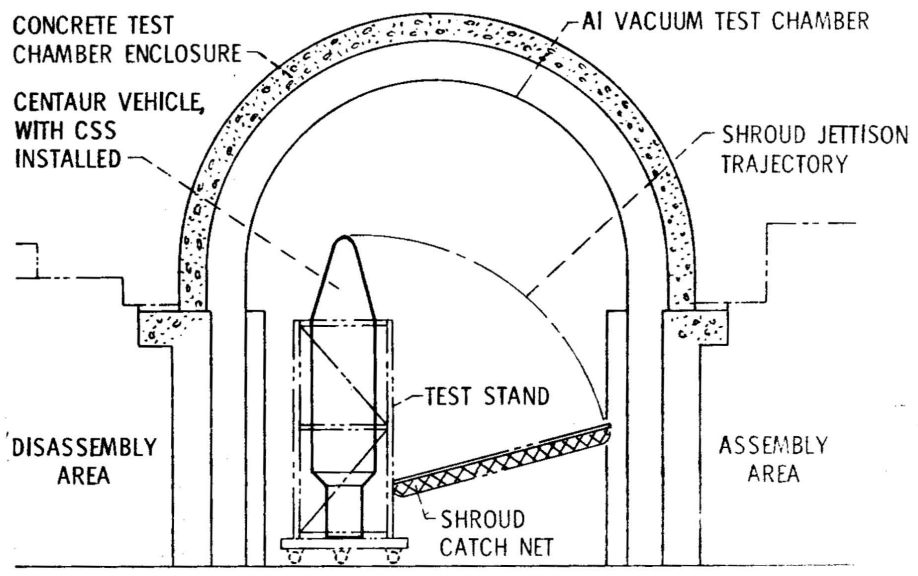

CSS TESTING AT LMSC

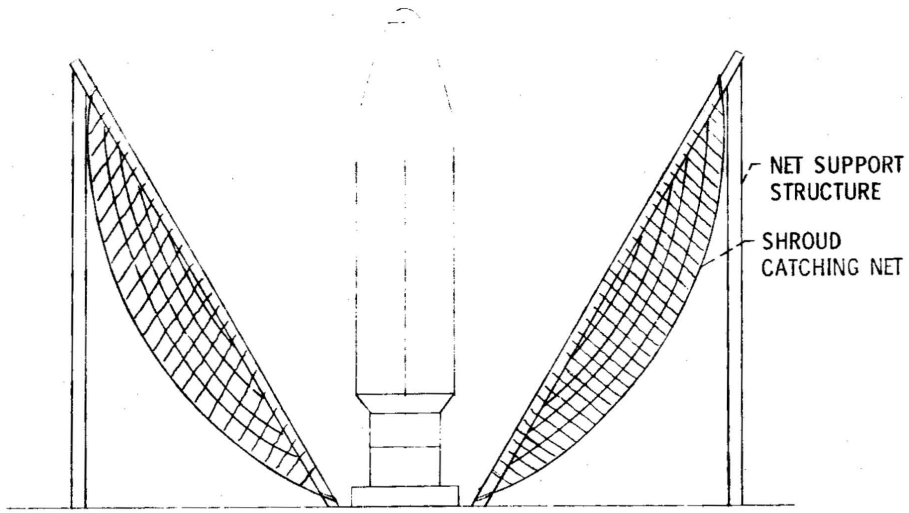

JETTISON TESTS
(SUNNYVALE BLDG 182)

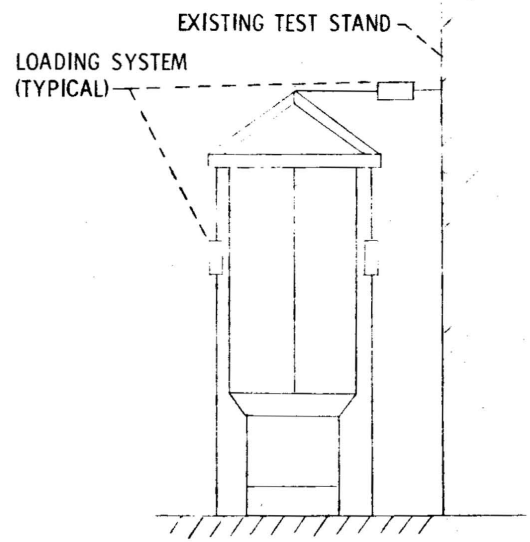

STRUCTURAL TESTS
(SUNNYVALE BLDG 102)

ADVANTAGES

1. EXISTING EQUIPMENT
   A. BASIC STRUCTURAL TEST STAND, USED FOR AF 10-FT SHROUD
   B. CRYOGENIC TEST STAND, WITH DEWARS AND DATA SYSTEM
   C. SEA LEVEL JETTISON TEST STAND, USED FOR AF 10-FT SHROUD
2. EXPERIENCED WITH SIMILAR TESTS OF LARGE SHROUDS
3. INCREASED CONTRACTOR RESPONSIBILITY
4. LOWER COST LMSC SUPPORT

DISADVANTAGES

1. MINOR MODIFICATIONS NEEDED TO EACH OF THREE TEST SITES
2. NO CENTAUR EXPERIENCE (NEED GD/C SUPPORT)
3. CHANGE ORDERS WOULD INCREASE CONTRACT COST

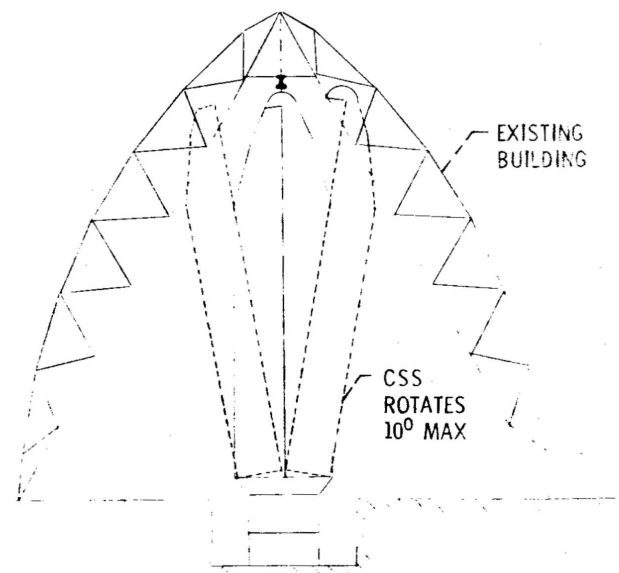

CRYOGENIC TESTS
(MODIFIED CRYO TEST SITE AT SANTA CRUZ)

COST FOR CSS TESTING AT PLUM BROOK B-3

TESTS	PLUM BROOK			LMSC SUPPORT	SUBTOTAL
	MAN-HR, HR*	LABOR COST**	CONTRACT COST		
STRUCTURAL	29 000	$ 580 000	$150 000	109 000	$ 839 000
CRYO (UNLATCH, VENT, & HEAT TRANSFER)	14 000	280 000	75 000	112 000	467 000
JETTISON (SEA LEVEL)	7 000	140 000	120 000	167 000	427 000
	50 000	$1 000 000	$345 000	388 000	
GRAND TOTAL					$1 733 000

*TOTAL REQUIREMENT; TECHNICIAN HR ≈ 2/3, ENGINEERING HR ≈ 1/3.
**MAN-HR AT $20/HR.

too hi

COST FOR CSS TESTING AT PLUM BROOK SPF

Plum Brook SPF Estimate*

Tests	Plum Brook Man-hr., Hr**	Plum Brook Labor Cost***	Contract Cost	LMSC Support	Subtotal
Structural†	10,100	$ 202,000	$ 318,000	$ 109,000	$ 629,000
Cryo (unlatch, vent, & heat transfer)†	3,400	68,000	66,000	112,000	246,000
Jettison (altitude or sea level)	2,400	48,000	16,000	167,000	231,000
	15,900	$ 318,000	$ 400,000	$ 388,000	
				GRAND TOTAL	$ 1,106,000

† Area safety not resolved

LVD Estimate*

Tests	Plum Brook Man-hr., Hr**	Plum Brook Labor Cost***	Contract Cost	LMSC Support	Subtotal
Structural†	27,000	$ 540,000	$ 407,000	$ 109,000	$1,056,000
Cryo (unlatch, vent, & heat transfer)†	16,200	324,000	52,000	112,000	488,000
Jettison (altitude or sea level)	10,800	216,000	16,000	167,000	399,000
	54,000	$1,080,000	$ 475,000	$ 388,000	
				GRAND TOTAL	$1,943,000

* Based on testing in sequence shown, and with shroud catcher and half of needed instrumentation available from Saturn shroud tests (to be done in late 1970)

** Total requirement; technician hr ≈ 2/3, engineering hr ≈ 1/3

*** Man-hr. at $20/hr

too hi

COST FOR CSS JETTISON TESTING AT PLUM BROOK SPF**

PLUM BROOK SPF ESTIMATE

TEST	PLUM BROOK			LMSC SUPPORT	TOTAL
	MANHOUR	LABOR COST*	CONTRACT		
JETTISON (ALTITUDE)	10,200	$204,000	$95,000	$167,000	$466,000

too hi

*MANHOUR AT $20/HR.

**BASED ON USING EQUIPMENT FROM SATURN SHROUD TEST (10/70 thru 5/71).

COST FOR CSS TESTING AT LMSC

TESTS	LMSC LABOR & MATERIAL	GD/C SUPPORT*	SUBTOTAL
STRUCTURAL	$ 384 000	$270 000	$ 654 000
CRYO (UNLATCH, VENT, & HEAT TRANSFER)	408 000	270 000	678 000
JETTISON (SEA LEVEL)	312 000	150 000	462 000
	$1 104 000	$690 000	
GRAND TOTAL			$1 794 000

*NEEDED TO ERECT & MAINTAIN CENTAUR AT LMSC TEST SITES.

CSS SCHEDULE AND PLUM BROOK RSD MANPOWER REQUIREMENTS

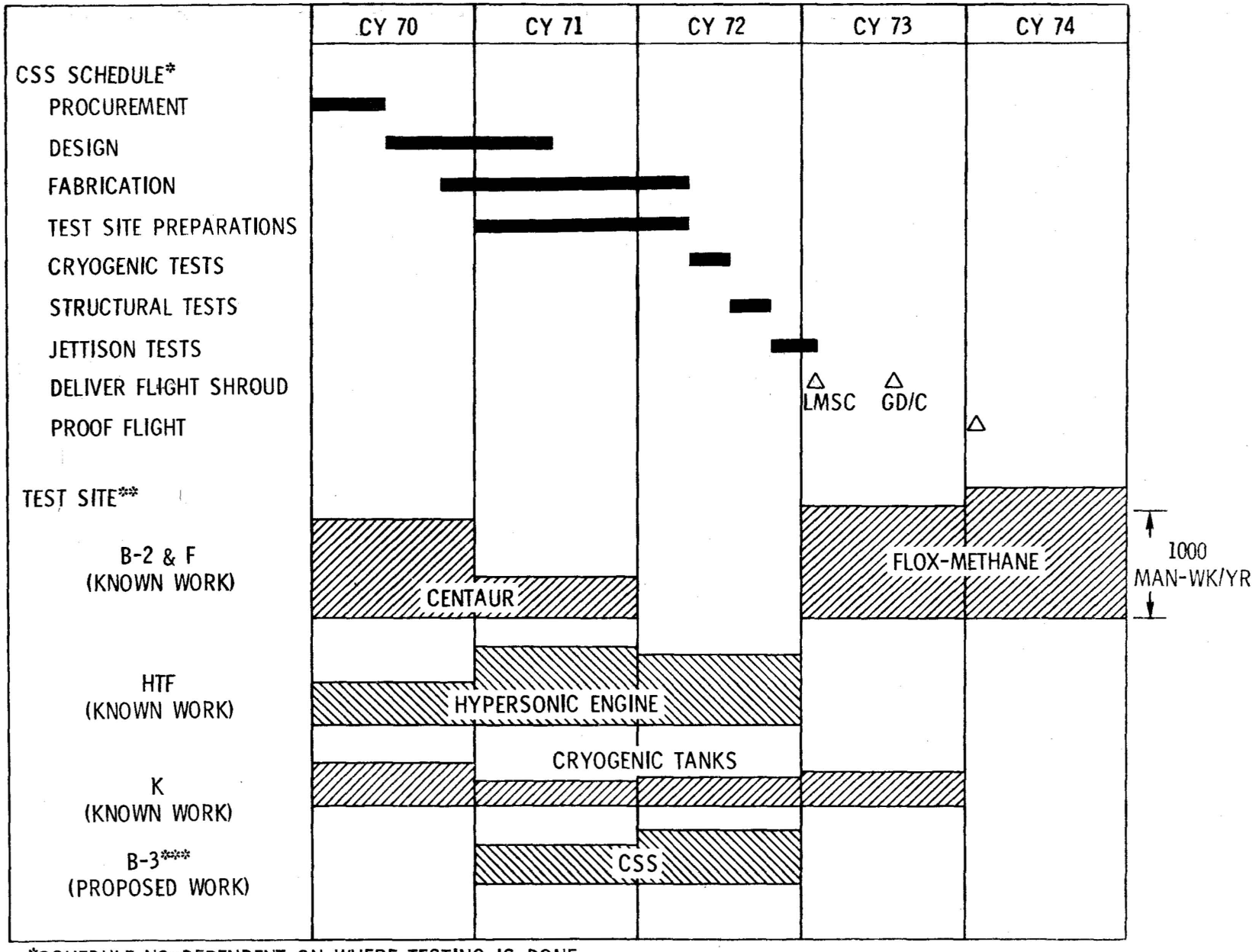

*SCHEDULE NOT DEPENDENT ON WHERE TESTING IS DONE.
**BAR HEIGHT SHOWS TECHNICIAN REQUIREMENTS ESTIMATED BY RSD, AVERAGED OVER WHOLE YEAR.
***ALSO NEED 4 ENGINEERS FOR FULL TIME.