High Energy Rocket Engine Research Facility
"B-1"

Nuclear Rocket and Dynamics Control Facility
"B-3"

NASA-Lewis Research Center
Plum Brook Station
Sandusky, Ohio
March 1, 1967

Illustrations

Figure 1 - Plot plan of Plum Brook Station showing location of High Energy Rocket Engine Research Facility "B-1" and Nuclear Rocket and Dynamics Control Facility "B-3"

Figure 2 - General site plan of "B-1" and "B-3" Facilities

Figure 3 - General view of "B-1" and "B-3" Facilities

Figure 4 - Aerial view of "B-1" and "B-3" Test Stands

Figure 5 - "B-1" Test Stand Ground Floor Plan

Figure 6 - "B-1" Altitude Exhaust and Bottled Nitrogen Systems

Figure 7 - "B-1" Steam Ejectors Flow Capacity

Figure 8 - "B-1" Helium System

Figure 9 - "B-1" Nitrogen System

Figure 10 - "B-1" Hydrogen System

Figure 11 - "B-1" Waste Cooling Water Treatment System

Figure 12 - "B" Control Building Floor Plan

Figure 13 - Block Diagram of "B-1" Data Acquisition System

Figure 14 - "B-3" Test Stand Ground Floor Plan

Figure 15 - "B-3" Nitrogen System

Figure 16 - "B-3" Helium System

Figure 17 - "B-3" Hydrogen System

Figure 18 - "B-3" Data Acquisition System - "B-3" Test Stand

Figure 19 - "B-3" Data Acquisition System - "B" Control Building

Table of Contents

Part I

Page

High Energy Rocket Engine Research Facility "B-1"

1. Introduction 1

2. Summary of Specifications for "B-1" Facility 1

2.1 Test Stand 1
2.2 Exhaust System 2
2.3 Waste Cooling Water Treatment System 2
2.4 Data Acquisition System 2
2.5 Exhaust Gas Cooling 2
2.6 Propellant and Purge Systems 2

3. Description 3

3.1 "B-1" Facility Arrangement 3
3.2 "B-1" Test Stand 3

3.2.1 General 3
3.2.2 Maximum Test Rocket Thrust 3
3.2.3 Test Specimen Mounting Provisions 4
3.2.4 Test Stand Support Areas 5
3.2.5 Test Stand Services 5
3.2.6 Exhaust Duct 5
3.2.7 Propellant Run Tank 6

3.3 "B" Complex Altitude Exhaust System 6

3.3.1 General 6
3.3.2 Boiler House 7
3.3.3 Accumulators 7
3.3.4 Ejectors 7
3.3.5 Flares 8

3.4 Waste Cooling Water Treatment System 8
3.5 Valve House 8
3.6 Pump House 9

Page

3.7 Gaseous and Cryogenic Supply 9

3.7.1 General 9
3.7.2 Nitrogen System 10
3.7.3 Helium System 10
3.7.4 Hydrogen System 10

3.8 Hydraulic System 11
3.9 Electrical System 11
3.10 Safety System 11
3.11 Control Building 11
3.12 Data Acquisition System 12

3.12.1 General 12
3.12.2 Test Stand Terminal Room and Equipment 12
3.12.3 "B" Control Building 13
3.12.4 "H" Building 14

4. Operation 14

Part II

Nuclear Rocket and Dynamics Control Facility "B-3" 15

5. Introduction 16

6. Summary of Specifications for "B-3" Facility 16

6.1 "B-3" Test Stand 16
6.2 Altitude Exhaust System 16
6.3 Data Acquisition System 17

7. Description 17

7.1 "B-3" Facility Arrangement 17
7.2 "B-3" Test Stand 17

7.2.1 General 17
7.2.2 Research Package Mounting Provisions 18
7.2.3 "B-3" Test Stand Support Areas 18

7.2.3.1 General 18
7.2.3.2 Manifold and Purge Room 19

Page

7.2.3.3 Forward Instrumentation Rooms 19
7.2.3.4 Control Room 19
7.2.3.5 Mechanical Room 19
7.2.3.6 General Shop 19

7.2.4 "B-3" Test Stand Services 19
7.2.5 LH_2 Run Tank 20
7.2.6 Exhaust Duct 20

7.3 Altitude Exhaust System 21
7.4 Burn-Off System 21
7.5 Gaseous and Cryogenic Supply 21

7.5.1 General 21
7.5.2 Nitrogen System 22
7.5.3 Helium System 23
7.5.4 Hydrogen System 23

7.5.4.1 General 23
7.5.4.2 LH_2 Storage Tank 23

7.6 Hydraulic System 24
7.7 Vacuum System 24
7.8 Electrical Service 24
7.9 Boiler House 24
7.10 Safety System 25
7.11 "B" Control Building 25
7.12 Data Acquisition System 27

7.12.1 General 27
7.12.2 "B-3" Test Stand (Test Level) 27
7.12.3 "B-3" Forward Instrument Room 27
7.12.4 "B" Control Building Acquisition Data Instrumentation Room 28
7.12.5 "B" Control Building - "B-3" Control Room 28

8. Operation 29

Part I

High Energy Rocket Engine Research Facility

"B-1"

NASA-Lewis Research Center
Plum Brook Station
Sandusky, Ohio

High Energy Rocket Engine Research Facility

"B-1"

1. Introduction

The "B-1" test facility, Figure 1, located at the NASA-Lewis Research Center Plum Brook Station, Sandusky, Ohio, was designed for static firing of hydrogen fluorine engines of up to 30,000 pounds thrust under simulated altitude conditions. The facility has been used to investigate the startup of a nuclear rocket. Cold flow (non-nuclear) simulation of a full scale nuclear engine involved such investigations as the following:

a. Dynamics and control during startup.

b. Heat transfer and flow during startup.

c. Mechanical and thermal phenomena.

d. Low speed turbopump mapping.

Upon completion of the exhaust duct cooling system and the addition of a second propellant supply system, the facility will have the capability for operational tests of rocket engines under vacuum conditions.

2. Summary of Specifications for "B-1" Facility

2.1 Test Stand

a) Test Specimen Envelope (Research hardware vacuum capsule internal dimensions)	13 ft, 7 inches ID x 30 ft long (not including 3 ft, 9 inches high dome)
b) Test Specimen Envelope (Test level clear test volume)	16 ft x 16 ft x 30 ft high
c) Maximum test engine thrust	30,000 lbs.
d) LH_2 Run tank capacity	2,000 gal. at 100 psig. (20,000 gal. tank available for installation)
e) Test stand dimensions:	34 ft wide x 42 ft long x 135 ft high
f) Crane capacity:	20 ton

2.2 Exhaust System

a) Vacuum Capability (no flow conditions)	0.5 psia in 45 seconds
b) Test Duration Capability	3 to 4 minutes (with 3 operational accumulators)
	6 minutes (with 5 accumulators 2 additional being installed)
c) Turn around time (to recharge accumulators)	3 hours
d) 2 stage steam ejector system steam rate	416 lbs/sec

e)

Engine Exhaust Nozzle Exit Pressure	Ejector Pumping Capacity
1.5 lb/in^2	10 lbs. H_2
4	20
8	30
14.7	48

2.3 Waste Cooling Water Treatment System

a) Waste Water Basin Capacity	816,000 gal.
b) Fresh Water Basin Capacity	1,300,000 gal.
c) System Capacity	200 GPM while reducing concentration from 500 PPM Fluorine to 100 PPM

2.4 Data Acquisition System

300 channel scanner

200 channels of continuous data

2.5 Exhaust Gas Cooling

For engines up to 6,000 lbs. thrust

2.6 Propellant and Purge Systems

LH_2 propellant system

GH_e purge system

GN_2 purge system

3. Description

3.1 "B-1" Facility Arrangement

The following major elements (Figure 2) comprise the facility:

a) Test stand including water cooled exhaust duct

b) Test stand support areas at base of test stand

c) Altitude exhaust system consisting of steam boiler house, accumulators, steam ejectors, and valve house (this system is shared with the "B-2" and "B-3" facilities)

d) Flares for hydrogen burnoff

e) Waste treatment equipment

f) Pump house

g) Waste water basin

h) Fresh water basin

i) Gaseous and cryogenic supply systems

j) Data Acquisition system

k) "B-1" control room in "B" Control Building.

3.2 "B-1" Test Stand

3.2.1 General

The "B-1" test stand, Figure 4, consists of a vertical tower 135 ft. high with a 34 ft. x 42 ft. base. The test stand is enclosed above the 68 ft. level and has three 16 ft. wide x 42 ft., 6 in. high roll up electrically operated doors on the north, south, and west sides to provide adequate ventilation in the event of a hydrogen leak.

All electrical equipment used during test operations located in the test stand is of explosion proof design. Auxiliary systems are located on two open floor areas below the 68 ft. level. The enclosed upper portion of the test stand is provided with a tempered air supply.

3.2.2 Maximum Test Rocket Thrust

The following construction tasks must be accomplished to prepare the "B-1" facility for hot firing tests of rocket engines:

a. Exhaust duct cooling system installation must be completed.

b. Ejector system interstage condenser installation must be completed.

c. A second propellant system must be added.

d. Additional exhaust gas cooling capacity may be required depending on rocket engine size.

Engines up to 6,000 lb. thrust can be tested in the "B-1" facility with no modifications to the existing exhaust system.

Without major redesign, the largest engine which can be tested in the "B-1" facility is an engine of 20,000 lb. to 30,000 lb. thrust based on firing durations long enough to approach steady state conditions in the exhaust system. The controlling factor is the handling of the large amount of heat liberated by the rocket engine and the limitations of the spray cooler capacity at the inlet to the first stage ejector and cooling of the exhaust duct between the water cooled diffuser and the spray coolers.

Engines up to 30,000 lb. thrust can be tested with the addition of a new diffuser.

Engines in the 30,000 to 75,000 lb. thrust range can be tested with the installation of a new diffuser and additional exhaust gas cooling.

Run duration will be limited by exhaust cooling capacity and/or propellant storage capability.

3.2.3 Test Specimen Mounting Provisions

The "B-1" facility design provides for two methods of test specimen mounting as follows:

a. Vacuum Capsule

b. Test Stand Carriage

The vacuum capsule completely encloses the rocket engine so that the entire engine can be operated in a vacuum. It is fabricated of 9/16 inch thick steel plates and is made in two parts forming a cylinder having the following internal dimensions: 13 ft., 7 in. in ID x 30 ft. in length not including a 3 ft., 9 in. high dome.

For nuclear rocket cold flow tests, a test stand carriage was utilized for mounting the research hardware. The carriage consisted of a steel framework approximately 10 ft. wide x 15 ft. long x $8\frac{1}{2}$ ft. high mounted on four "V" grooved wheels which were located on rails at the 68 ft. level.

Clear test space at the 68 ft. level is a rectangular parallelepiped 16 ft. square x 30 ft. high.

3.2.4 Test Stand Support Areas

A concrete shelter, Figure 5, at the base of the test stand houses the instrumentation terminal room, shop, equipment, room, and control room.

The terminal room is approximately 17 ft. wide x 28 ft., 2 in. long and houses instrumentation system signal conditioning equipment.

The shop area is approximately 13 ft. wide x 15 ft., 4 in. long.

The control room is approximately 13 ft., 10 in. wide x 40 ft. long and houses the following equipment: relay and control terminal cabinets, CO_2 system cabinet, fire detection test panel and relay cabinet, and combustible gas detection cabinet.

3.2.5 Test Stand Services

A 20 ton moving crane and a 3,000 lb. capacity freight elevator are available for material handling purposes. Removable floor gratings permit raising the research hardware to the test level by means of the crane.

The freight elevator is located external to the test stand on the west side.

A 500 lb. capacity passenger elevator is also provided on the inside of the test stand.

A railroad siding is located on the east side of the test stand.

3.2.6 Exhaust Duct

The exhaust duct, Figure 4, consists of a water jacketed steel pipe 4 ft., 3 in. minimum diameter which extends downward from the 68 ft. level to the ground level. A 90° elbow at the ground level redirects the exhaust gases and is cooled by an external water spray.

An $18\frac{1}{2}$ ton steel heat sink is installed downstream of the no flow diffuser. The heat sink is composed of 132 pieces of 8 inch diameter x 9 ft., 10 inches long pipe. Approximately 3×10^6 BTU can be absorbed by the heat sink in raising the temperature of the steel from 100°F to 1,000°F.

Two spray coolers are now installed in the exhaust system. The coolers have a water inlet of 33,000 GPM and are capable of removing approximately 250,000 BTU/sec from the exhaust gases (Installation of the coolers is not complete).

3.2.7 Propellant Run Tank

The LH_2 run tank is mounted in a vertical position at the 98 ft. level of the test stand and has a maximum capacity of 2,000 gal. of hydrogen. The run tank is cylindrical in shape, has an overall length of 15 ft., an internal diameter of 5 ft., and is constructed of 9/32 inch thick type 304 stainless steel. The ends of the tank are elliptical with a 2:1 ratio. The tank has been hydrostatically tested at a pressure of 150 psig and has an operating pressure of 100 psig. The tank is insulated with 4 inches of polyurethane type insulation.

The top of the tank has two 4-inch, one 3-inch, one 2.5-inch, and four 2-inch ports extended through the insulation which are used for the liquid level probe, hydrogen fill and pressurization, return line, purge lines and burst disc connections.

At the bottom of the tank is a liquid anti-swirl vane assembly followed by a wire mesh filter below the converging transition spool. After the filter the liquid hydrogen flows through straightening vanes before entering the 4-inch flowmeter.

3.3 "B" Complex Altitude Exhaust System

3.3.1 General

The purpose of the altitude exhaust system (Figure 6) is to simulate altitude pressure conditions in the exhaust duct during an engine firing. The exhaust system includes steam boilers, accumulators, valves, and ejectors capable of evacuating the 30,000 cubic feet of "B-1" exhaust duct to a pressure of 0.5 psia in approximately 45 seconds under no flow conditions. With a 45 lb/sec. gaseous hydrogen flow from an engine under test, the exhaust system can produce a back pressure of 15 psia. The three operational accumulators have sufficient steam capacity for an engine firing run of 3 to 4 minutes. Turn around time to recharge the accumulators is approximately 3 hours utilizing four boilers. Two additional accumulators are being installed for the Spacecraft Propulsion Research Facility "B-2." Five accumulators will permit a test run of approximately 6 minutes.

3.3.2 Boiler House

Four boilers are located in the boiler house (Figure 2) and each has a capacity of 28,000 lbs per hour of 500 psig saturated steam. Approximately 25,000 lbs per hour per boiler are available for charging the accumulators. The remaining 3,000 lbs per hour per boiler are used for preheating feedwater and fuel oil and driving the turbines used in conjunction with the water pumps. The boiler maximum operating time is limited only by the amount of fuel oil and feedwater available.

Control of the steam system is accomplished remotely from the "B" Control Building. Steam service lines to the first and second stage ejectors are 16 inch and 30 inch diameter pipes respectively.

3.3.3 Accumulators

Three accumulators are operational and two additional will be provided for storage of 500 psig saturated steam. The accumulators are capable of supplying 28,900 lb of steam each when discharging from 500 psig saturated steam to 200 psig saturated steam. The accumulators are cylindrical in shape and are 12 ft. in OD x 53.5 ft. in length with 2:1 elliptical heads and 3 inch foam glass insulation. They are fabricated of 2-3/16 inch plate thickness and have a usable storage of 42,000 gallons of superheated water at 500 psig.

3.3.4 Ejectors

Two steam jet ejectors (Figure 4) are driven by steam supplied from the accumulators which are blown down through a pressure regulating system located in the valve house. The ejectors pump down the exhaust duct to simulate altitude conditions at the nozzle exit. Pumping capability of the two-stage steam ejector system is shown in Figure 7. The ejector system has a gas cooler for entrapping fluorine compounds present in the exhaust gas.

The first stage ejector has a throat area of 34.45 square inches; the second stage ejector 134.46 square inches. The total steam weight flow at 150 psig regulated inlet pressure in 416 pounds per second. The pumping capacities of the ejectors are 10, 20, 30, and 48 pounds of gaseous hydrogen with exhaust nozzle exit pressures of 1.5, 4, 8 and 14.7 pounds per square inch respectively.

An interstage condenser is installed in the exhaust system but is not operational.

3.3.5 Flares

Six equally spaced continuously burning natural gas flares (Figure 4) are mounted at the exit of the second stage ejector to dispose of the hydrogen in the exhaust system. The flares are ignited by the propagation of a flame initiated from the valve house and passing up a tube.

3.4 Waste Cooling Water Treatment System

Water which is contaminated with fluorine or other toxic exhaust products requiring treatment is passed to the waste retention pond for purification in the waste cooling water treatment system (Figure 8). The system capacity is 200 GPM of water with 500 PPM fluorine in the form of dilute hydrofluoric acid. The effluent will contain no more than 10 PPM hydrofluoric acid which is adequate purity for reuse of the water for cooling purposes.

A 13,576 gal. clarifier is located adjacent to the pump house on the south side. The clarifier is designed for a sludge discharge with minimum sludge content of 5% by volume.

A 32 ft. x 32 ft. 30,720 gal. sludge basin is located south of the valve house.

The 8 ft. x 8 ft. x 10 ft. 4787 gal. each recarbonator and neutralizer tanks are located southwest of the pump house.

The waste water basin is 136 ft. wide x 200 ft. long and has a capacity of 816,000 gal.

The fresh water basin is 142 ft. wide x 300 ft. long and has a capacity of 1,300,000 gal.

The following water treatment system equipment is located in an 18½ ft. wide x 29 ft. long room located in the south end of the pump house basement.

a. Waste water circulation pump

b. Gas compressor

c. Dry lime feeder

d. Coagulant aid mixer

3.5 Valve House

The valve house encloses a steam pressure controller which maintains the steam pressure supply to the ejectors at 150 psi.

3.6 Pump House

The pump house (Figure 4) encloses the exhaust system pumping equipment, cooling water waste treatment equipment, and serves as a model preparation area. Cooling water is pumped from the fresh water basin to the exhaust system diffuser and gas cooler to the waste retention basin.

Exhaust system water pumping equipment located in the basement of the pump house includes the following:

a. 33,000 GPM pump driven by a 1,000 HP motor (installed but not checked out)

b. Two 3,500 GPM pumps driven by 200 HP motors (operational) An additional 33,000 GPM pump and 1,000 HP motor are available for installation. The cooling water waste treatment room occupies 525 sq. ft. of the 3,000 sq. ft. basement area.

Equipment located on the ground floor of the pump house includes motor starter equipment and a battery power supply. Approximately 1,600 sq. ft. of the 3,000 sq. ft. of ground floor space is available for use as a model preparation area.

3.7 Gaseous and Cryogenic Supply

3.7.1 General

All gaseous and cryogenic supplies (Figure 2) are stored at the ground level either in compressed gas cylinder semi-trailers, fixed compressed gas storage bottles, mobile liquid dewars or railcars.

The mobile dewars are of the standard type with vacuum jacketed tanks and reflector shields. Through the use of a liquid boil-off heat exchanger, the dewars are self-pressurized for transfer of the liquids. They have multiple size outlets and capacities ranging from 3,600 to 13,500 gal. Due to the height of the test stand, liquid nitrogen is transferred by an external facility pump.

The compressed gas trailers have a capacity of 70,000 standard cubic feet each at 2,400 pounds per square inch.

Parking space and facilities for unloading are provided at the base of the test stand for the following service trailers and railcars:

1 LN_2 trailer

1 LH_2 trailer

2 GH_2 trailer

1 GN_2 trailer

1 GH_e trailer

1 GH_2 railcar

There is a "T" in the "B-3" facility transfer line which will accommodate tie in of the "B-1" facility to the 200,000 gal. LH_2 storage dewar (paragraph 7.5.4.2) located 400 ft. northeast of "B-1." A vacuum jacketed transfer line would be required.

A 2,000 gal. 115 psia LH_2 run tank is located in the test stand. Should future test programs require increased capacity, a 20,000 gal. 85 psig design pressure LH_2 run tank is available for installation in the test stand.

There is a permanent GN_2 storage area having a capacity of 100,000 SCF at 2400 psi located north of the exhaust system gas cooler.

3.7.2 Nitrogen System

The nitrogen system is shown in Figures 6 and 9. In general, the permanent storage supply is used to purge the exhaust duct (Figure 6) and the trailer supply is used for pneumatic valve control, vent stack and pump, research package and terminal cabinet purging.

3.7.3 Helium System

The function of the helium system (Figure 8) is to purge the LH_2 system and research hardware and to keep frost from collecting on viewing windows associated with the research hardware during a test run. Other uses include purging of the transfer line, critical electrical cabinets and tank insulation. Helium gas trailers are utilized for storage.

3.7.4 Hydrogen System

Liquid hydrogen is transferred to the run tank at the top of the test stand through a 2 inch vacuum jacketed line (Figure 10). During the test run, gaseous hydrogen is used to pressurize the tank.

3.8 Hydraulic System

To maintain the proper pressure in the run tank and weight flow through the research hardware, hydraulic servo valves are provided. The hydraulic system used to operate these valves consists of two independent units, each pumping 20 gallons per minute through a 10 micron nominal filter at 3,000 pounds per square inch. If one unit fails the load can be switched to the other.

3.9 Electrical System

Electrical service at the "B-1" test stand proper has the following capacity:

440V Service 300 KVA
2400V Service to pump house only - 3750 KVA

With minor substation modifications the 2400V Service could be increased to 5,000 KVA.

The total electrical load of the "B-1" facility with all pumps running is estimated to be 2400 KVA.

3.10 Safety System

Standard gas analyzers are used to detect hydrogen leaks at strategic locations throughout the test stand. Upon the detection of hydrogen, the location is immediately displayed on the safety and annunciator panels in the control room. Large amounts of hydrogen in the top of the test stand will initiate a shutdown and a carbon dioxide fire extinguishing system can be triggered from the control room.

3.11 Control Building

During the test run, the "B-1" facility is evacuated and all control is from the "B" control building (Figure 12) located approximately 2,300 ft. southwest of the test stand.

The test stand, including the altitude exhaust system, and research apparatus are connected to the "B" control building by underground conduit and overhead transmission lines. Cables also tie in to the pump, valve, and boiler houses. Signals from the "B" control building operate relays in the test stand which apply test stand power to the device being controlled.

There are 20 facility control cabinets (with space to house equipment for future experiments) and 7 servo control cabinets positioned in an "L" shape. Event recorders are used to set up the automatic timers and record the open and closed position of all valves during a test run. Each valve is sequenced in the proper order and the test run proceeds automatically upon starting the main timer.

Television coverage of the secondary steam ejector and research apparatus is provided to facilitate remote control during a test run. The television cameras have pan, tilt, and zoom features. Information on the various TV monitors in the control room can be recorded by selective switching onto a videorecorder. In addition, motion picture cameras may provide a documentary record of the test run when desired.

The annunciator system monitors key safety limit parameters and will initiate a shutdown or warning. The graphic panel indicates the condition of the test run at all times.

3.12 Data Acquisition System

3.12.1 General

The "B-1" facility data acquisition system, Figure 13, equipment is located in four areas as follows: test stand, test stand terminal room, "B-1" control room located in the "B" control building, and the "H" building.

3.12.2 Test Stand Terminal Room and Equipment

The cable termination cabinets located on the terminal floor of the test stand (75 ft. above ground level) contain space for mounting seven thermocouple reference ovens (to be supplied by future users), providing up to 208 channels of various types of thermocouples.

A capacitance type liquid level system in the propellant tank has its associated signal conditioning equipment located in these same cabinets. Cables for strain gauges, resistance thermometers, platinum resistance thermometers and flow meters also terminate in these cabinets. From the ovens and terminal strips, shielded cables go directly to the program board located in the terminal room at the base of the test stand. During a test run, the terminal room and cabinets located therein are pressurized.

The terminal room contains a 4896 point program board which ties all research apparatus instrumentation to the signal conditioning equipment and transmission cables.

The room is limited to 20 instrument cabinets and the scanner system. Rack space is provided for pressure transducer balance panels for 90 channels, DC differential type amplifiers for 104 channels, platinum resistance thermometer electronics for 30 channels and voltage divider circuits for 12 channels.

The scanner system is a self-contained, 300 channel, data logging unit. By dialing the desired channel, the output signal can be indicated in digital voltage form, in digital resistance form, or be displayed on an oscilloscope. The resistance and voltage measurements can be compared to a reference signal and printed in digital form on a paper tape at a rate of one channel per second. Any instrumentation channel can be connected to the scanner system by way of a program board.

Any channel may be selected and the signal visually observed from the control room. The system is used to check the channels and aid in a prerun setup.

The program board system is the connecting point between the test stand and transmission cables.

The input and output cables are connected at the rear while the patching takes place at the front on the removable program board. All of the cables from the top of the test stand, the transmission cable, amplifiers, balance panels, etc. are connected to the program board. The scanner system and signal conditioning equipment are patched into the removable program board.

3.12.3 "B" Control Building

From the program board in the test stand, the instrumentation signals are sent to a similar patch board in the control room via 8 cables each consisting of 51 pr of shielded conductors. The cables are shielded externally and follow the same path as the control cables but are in a separate conduit in the underground duct and are supported at a different level on the transmission poles.

After the signal arrives at the control building, it can be sent to the various types of analog recording equipment in the control room through the patch board. In general, the only instrumentation recorded at this point are the parameters that pertain to the status of the test run. There are 21 0-10 millivolt input strip charts, two high response vacuum tube voltmeters, and two 8 channel pen type oscillographs that indicate the progress of the test run. Immediately after the test a few important higher frequency data channels can be analyzed from two multichannel light beam oscillographs.

3.12.4 "H" Building

The detailed analog and digital recording of experimental data is performed in the "B" Control and "H" buildings. Signals terminate at a patch board in the "H" building in the same manner as in the control building. Digital recording is done at "H" building, and main analog recording is at "B" Control Building. High frequency FM recorders and additional oscillograph recorders are also available at "H" building.

Digital to analog converters are available in "H" building for display of analog signals.

4. Operation

The "B-1" facility operating procedure varies depending on the nature of each particular research program. The following is a typical sequence for a liquid hydrogen pump test.

In preparing the facility for a test run, some 25 engineers, mechanics, and technicians are required for a two day countdown. During this time all instrumentation is checked and calibrated and all supporting system operations verified, high pressure gas trailers and liquid dewars brought into position and run programmer and timers set up for the particular test sequence.

Prior to loading liquid hydrogen in the propellant tank, the transfer lines and tank are evacuated and inerted with helium, the exhaust duct inerted with nitrogen, and hydrogen burnoff flares are ignited.

The "B-1" area is evacuated prior to the liquid hydrogen loading operation.

With all systems in a ready condition and precooling of pump and feedline accomplished, the steam driven ejector system operation is initiated. When the exhaust duct reaches about 2 psia, the program timers energize the exhaust duct cooling system and start the test run. After the test is completed, any remaining hydrogen in the tank is back transferred and necessary procedures for securing the facility are carried out.

Part II

Nuclear Rocket and Dynamics Control Facility

"B-3"

NASA-Lewis Research Center
Plum Brook Station
Sandusky, Ohio

Nuclear Rocket and Dynamics Control Facility

"B-3"

5. Introduction

The "B-3" test facility, Figure 1, located at the NASA-Lewis Research Center Plum Brook Station, Sandusky, Ohio, was designed for the performance of non-nuclear altitude tests on various components of large second generation nuclear rocket engines. The "B-3" facility was designed for two specific types of projects:

a. Propellant system research

b. Turbo pump research

Paralleled pumps can be driven at liquid hydrogen discharge flow rates up to 200 lbs/sec.

The facility has no provisions for hot firing tests.

6. Summary of Specifications for "B-3" Facility

6.1 "B-3" Test Stand

a. Test level clear volume	$27\frac{1}{2}$ ft. wide x 32 ft. long x 19 ft. high.
b. LH_2 run tank capacity	40,000 gal. (at 85 psig design pressure)
c. Test stand dimensions	50 ft. wide x 50 ft. long x 210 ft. high
d. Exterior crane capacity	65 ton
e. Shop utility crane capacity	5 ton
f. Elevator capacity	3 ton

6.2 Altitude Exhaust System

The "B" Complex altitude exhaust system is utilized. Performance is virtually the same as for "B-1" (see paragraph 2.2).

6.3 Data Acquisition System

400 channel scanner

250 channels of continuous data

7. Description

7.1 "B-3" Facility Arrangement

The following major elements, Figure 2, comprise the "B-3" facility:

a. "B-3" test stand

b. Test stand support areas

c. "B-3" boiler house

d. Burn-off system

e. Gaseous and cryogenic supply system

f. Data Acquisition system

g. "B-3" control area in "B" Control Building

The "B-3" facility utilizes the "B-1" altitude exhaust system.

7.2 "B-3" Test Stand

7.2.1 General

The "B-3" test stand, Figure 4, consists of a vertical tower 210 ft. high with a 50 ft. square base. The test stand is enclosed above the 74 ft. level and has the following electrically operated roll up doors which are opened during testing to provide ventilation:

a. East side

1 door 22 ft. wide x 64 ft. high

1 door 22 ft. wide x 37 ft. high

b. West side

same as on East side

c. South side

1 door 25 ft., 9 in. wide x 103 ft., 5 in. high

1 door 30 ft. wide x 8 ft., 9 in. high.

The single 103 ft. high door on the South side facilitates use of the crane.

The partially enclosed lower elevations house the elevator shaftway, stairwell, and pipeway.

All electrical equipment located in the upper portion of the test stand is of explosion proof design. All cabinets in the upper levels are pressurized.

Overall dimensions of the "B-3" test stand including support areas at the base are 86 ft. long x 80 ft., 8 inches wide x 210 ft. high.

The upper enclosed areas of the test stand are provided with a tempered air supply.

Stairs extend from ground level to the 8th level 168 ft. above grade.

A servo valve cabinet and a control terminal cabinet are located on the 4th level 94 ft., 6 inches above grade. A mechanical vacuum pump is located on the 6th level.

7.2.2 Research Package Mounting Provisions

The research package is normally mounted on the third level which is 73 ft., 6 inches above grade. Various mounting schemes may be employed including the use of a carriage mounted on tracks. Clear floor area on the third level is approximately $27\frac{1}{2}$ ft. x 32 ft. Approximately 20 ft. separate the third and fourth levels. The fourth level has an opening 14 ft. wide x $17\frac{1}{2}$ ft. long centered on the LH_2 run tank vertical axis. The fifth floor is approximately 20 ft. above the fourth and has a 14 ft., 6 inch square opening centered on the LH_2 run tank vertical axis.

7.2.3 "B-3" Test Stand Support Areas

7.2.3.1 General

A concrete shelter, Figure 14, at the base of the test stand houses the Manifold and Purge Control Room,

Forward Instrumentation Rooms, Control Room, Mechanical Room, and General Shop area. All of the above areas are air-conditioned and pressurized.

7.2.3.2 Manifold and Purge Room

The Manifold and Purge Room is 12 ft., 10 inches wide x 22 ft., 9 inches long and houses a Control Terminal cabinet and control panels for the N_2 and H_e purge systems.

7.2.3.3 Forward Instrumentation Rooms

Equipment located in the 12 ft., 6 in. wide x 24 ft., 4 in. long Forward Instrument Room and the 15 ft., 4 inches wide x 24 ft., 4 inches long addition includes a 400 channel S.E.L. Sub-multiplexer, 400 channel scanner and other signal conditioning equipment.

7.2.3.4 Control Room

The 10 ft., 7 in. wide x 15 ft., 9 in. long Control Room houses the following equipment: control equipment cabinet, test stand control terminal cabinet, test stand relay cabinet, control power panel, PAX and intercom cabinet and Ohio Bell Telephone equipment and terminal cabinet.

7.2.3.5 Mechanical Room

A lighting panel, electrical distribution panel, motor control center, LO pump and LN_2 pump are located in the 14 ft., 4 inch wide x 29 ft. long Mechanical Room. This area is also used as an electrical shop.

7.2.3.6 General Shop

The General Shop area is 29 ft., wide x 49 ft. long. A 5 ton capacity crane is located in this area.

7.2.4 "B-3" Test Stand Services

A 65 ton capacity moving crane is located approximately 176 ft. above grade on the South side of the test stand. The crane rails are cantilevered out from the test stand so that the crane may be centered over a railroad car on the siding adjacent to the facility.

The test stand is serviced by a 3 ton capacity elevator with a floor area approximately 6 ft., 4 in. x 8 ft. Service is provided from the ground level to the 7th level 147 ft. above grade.

7.2.5 LH_2 Run Tank

The LH_2 run tank is mounted inside the test stand with the bottom of the tank approximately 115 ft. above grade and 42 ft. above the research package mounting level. The tank has an actual liquid capacity of 40,000 gallons.

The tank consists of two coaxial vessels with 12 inches of foam glass insulation on the outside of the inner vessel. Liquid hydrogen discharge is thru a 12 inch diameter outlet at the bottom of the tank. The space between the 2 vessels is kept under H_e pressure to keep out moisture. The tank is filled thru a 3 inch diameter vacuum jacketed line. Gaseous hydrogen is used to pressurize the LH_2 run tank thru a 3 inch diameter line. The capability exists for installation of four viewports (2 each on the top and bottom) for observing the behavior of the contained fluid. Viewports consist of 2 thicknesses of 1-3/4 inch thick quartz with a vacuum space in between.

The inner vessel consists of a 21 ft., 8 inch diameter x 8 ft. 4 inch high cylindrical section, a 2:1 elliptical head and a lower conical transition section terminating in a spherical surface at the lower end. Overall height of the inner vessel is 23 ft - 9 7/8 inches. Materials are 304 and 304-L stainless steel varying in thickness from 1/2 inches on the cylindrical portion to 3/4 inches on the elliptical head and lower sections. Design pressure for the inner vessel is 85 psig with a test pressure of 106 psig. The inner vessel is designed for full vacuum.

The outer vessel consists of a 23 ft., $9\frac{1}{4}$ inch diameter x 13 ft. 5 7/8 inches high cylindrical section, a 3 ft., 3 5/16 inches high hemispherical head, and a conical lower section. Overall height is 24 ft., 10 5/8 inches. The material is 0.1875 inch thick A283-C steel. Design pressure for the outer vessel is 3 inches of water absolute.

7.2.6 Exhaust Duct

A 54 inch diameter exhaust duct extends downward from the third level (at 73 ft., 6 in. above grade) to the ground level. At

ground level, a 90 degree elbow redirects the exhaust to the "B-1" first stage steam ejector located approximately 400 ft. distant.

7.3 Altitude Exhaust System

The purpose of the altitude exhaust system is to simulate altitude pressure conditions at the discharge of the research package during test. The "B-3" facility utilizes the "B" complex altitude exhaust system described in paragraph 3.3. Altitude performance of the "B-3" facility is virtually the same as that of the "B-1" facility as far as dead head pressure and propellant flow capacity are concerned.

7.4 Burn-Off System

The "B-3" facility burn-off stack is located approximately 315 ft. southeast of the test stand. The burnoff system is used to dispose of hydrogen during research hardware chill down and run cycles. A natural gas ignition burner is utilized having a capacity of 200 lb/sec. of hydrogen. An 8 inch line runs from the research hardware to ground level where a 14 inch type 304 stainless steel exhaust line connects the "B-3" test stand to the Burn-Off System. The discharge of the burn-off stack is 30 ft. above grade.

7.5 Gaseous and Cryogenic Supply

7.5.1 General

All gaseous and cryogenic supplies, Figure 2, are stored at ground level in compressed gas cylinder semi-trailers, fixed compressed gas storage bottles, mobile liquid dewars, stationary storage tank or railcars.

Parking space and unloading facilities are provided adjacent to the "B-3" test stand on the northwest side for the following service trailers:

a. 8 GH_2 tube trailers with a capacity of 70,000 SCF each at 2400 psig.

b. 3 or 4 LN_2 roadable dewars with a capacity of 6,000 gallons each.

c. 7 or 8 GN_2 tube trailers with a capacity of 70,000 SCF each at 2400 psig.

Three LN_2 and 8 GN_2 or 4 LN_2 and 7 GN_2 trailers can be accommodated simultaneously.

d. 4 GH_e trailers with a capacity of 70,000 SCF each at 2400 psig.

The railcar dewar area located adjacent to "B-3" on the South side provides facilities for handling 4 railcars as follows:

a. 2 hydrogen gas railcars with a capacity of 780,000 SCF at 5000 psig each.

b. 2 liquid hydrogen railcars (receiver) with a capacity of 34,400 gallons at 100 psig each.

A gaseous nitrogen bottle farm is located adjacent to the test stand on the southeast side consisting of 200 nitrogen bottles with a total capacity of 300,000 SCF at 2400 psig. This system is used to inert the exhaust duct.

A 200,000 gallon LH_2 storage dewar is located approximately 200 ft. northwest of the "B-3" test stand and supplies LH_2 to facility.

7.5.2 Nitrogen System

The gaseous nitrogen system, Figure 15, performs the following functions:

a. Purges the LH_2 burn-off system.

b. Provides charge pressure for hydraulic pump reservoirs.

c. Supplies pressure regulator loaders.

d. Provides gas ballast for vacuum pump.

e. Purges research hardware.

f. Valve actuation.

g. Pressurizes hydraulic accumulators.

h. Purges exhaust duct.

The liquid nitrogen system, Figure 15, supplies nitrogen for liquid nitrogen test runs or for pre-chilling the run tank on

liquid hydrogen test runs. A liquid nitrogen pump rated at 270 GPM is used to transfer from the dewars to the run tank.

7.5.3 Helium System

The helium system, Figure 16, is utilized to purge the following:

a. LH_2 run tank

b. H_2 pressurizing line

c. H_2 supply line

d. Burn-off system

e. Research hardware

f. Servo valve

g. LH_2 vent stack

h. Camera viewing window

i. LH_2 run tank insulation

7.5.4 Hydrogen System

7.5.4.1 General

Liquid hydrogen is transferred from the self-pressurizing 200,000 gal. LH_2 storage tank to the run tank in the "B-3" test stand thru a 3 inch diameter vacuum jacketed line at a maximum rate of 800 gallons per minute. During a test run, gaseous hydrogen is utilized to pressurize the "B-3" LH_2 run tank (Figure 17).

The 200,000 gal. tank also serves as a Plum Brook Station central collection point for LH_2. LH_2 may be transferred from this tank to roadable LH_2 dewars or to railcar dewars without opening the line to the "B-3" facility.

7.5.4.2 LH_2 Storage Tank

The 200,000 gallon capacity (plus 10% ullage). LH_2 storage tank consists of 2 coaxial vessels with Linde

5A molecular sieve filling the annular space to adsorb hydrogen leakage and maintain the annular space vacuum. The vessel is insulated by means of 9 inches of a quilted multilayer insulation (Linde S1-10) applied to the outer surface of the inner shell. The design normal evaporation rate is 0.053% per day based on 200,000 gallon capacity. The spherical outer shell is 43 ft., 4 inches in diameter is constructed of A-285-C Firebox material 0.76 inches thick, and weighs approximately 183,000 pounds. The spherical inner shell is 38 ft., 4 inches in diameter, is constructed of A-240 Tp 304 material, 0.437 to 0.456 inches variable thickness. Inner shell weight is approximately 90,000 pounds. All piping and nozzle attachments to the inner vessel are of A240 Tp 304.

7.6 Hydraulic System

Two identical hydraulic pumping units with 60 gallon reservoirs and 30 GPM 3,000 psi variable displacement pumps are located on the third level of the test stand. If one unit fails the load can be switched to the other. Hydraulic manifolding extends throughout the facility to the upper levels of the test stand for operating hydraulic servo valves used to maintain proper pressure in the run tank and correct weight flow through the research hardware.

7.7 Vacuum System

The 40,000 gallon run tank and all liquid hydrogen transfer lines are connected to a single stage 720 CFM mechanical vacuum pump which can evacuate these systems to 5-10 millimeters of mercury absolute (Figure 16). Alternate evacuation and helium gas purge cycles inert these systems prior to loading liquid hydrogen.

7.8 Electrical Service

Electrical service at the "B-3" facility has the following capacity:

a. 480 volt 3 phase delta system - 300 KVA

b. 208/120 volt 3 phase wye system - 112 KVA

7.9 Boiler House

The "B-3" boiler house is located approximately 160 ft. North of the "B-3" test stand. Two natural gas fuel hot water generators provide hot water for heating the "B-3" facility.

7.10 Safety System

Standard gas analyzers and fire detectors are utilized to detect hydrogen leaks or fires at strategic locations throughout the test stand. These detectors are connected to Safety and Annunciator panels in the "B" Control Building. In addition, the oxygen level in the exhaust duct is monitored after inertion and prior to research operation by means of an oxygen analyzer.

7.11 "B" Control Building

During a test run, the "B-3" facility is evacuated and all control is from the "B" Control Building, a reinforced concrete structure (Figure 12) located approximately 2600 ft. west of the test stand. Signals from "B" Control Building actuate relays at the test stand which apply test stand power to the device being controlled.

The following underground cables connect the "B-3" test stand with the "B" Control Building:

a. Nine 125 conductor externally shielded #16AWG cables used to operate all subsystems including the liquid hydrogen storage tank.

b. Five 50 pair individually shielded #18AWG cables connect cabinets on the test stand 95 foot level to the "B" Control Building for servo valve operation.

c. One 125 conductor externally shielded, one 60 conductor externally shielded, and one 25 pair individually shielded cable connect the "B" Control Building to the valve house to control the steam system.

The "B-3" control room, located in the "B" Control Building, is approximately 29½ ft. wide x 34 ft. long. Forty rack type cabinets are arranged in a "U" shape with the main test conductor control panel located in the center flanked on the left by the facility major subsystems control panel and on the right by the steam system control panel.

The following equipment is located in the "B-3" Control Building:

a. Wind speed and direction indicator

b. Closed circuit TV monitors

c. Gas and propellant permissive panel

d. Gas and propellant control panel

e. Gas and propellant graphic panel

f. Annunciator panels

g. Research equipment main test conductor graphic panel

h. Research equipment main test conductor control panel

i. Steam and purge permissive panel

j. Steam and purge graphic panel

k. Paging, phone, base radio equipment

l. Servo-control panel

m. 3 cabinets for future gas generators

n. 3 cabinets for future controllers

o. 3 cabinets for future programmers

p. 6 spare cabinets

There are provisions for closed circuit TV coverage of all levels of the test stand and trailer areas. Six TV circuits are operational. Five of the seven TV cameras available have pan and tilt control. Information on the various TV monitors in the "B-3" control room can be recorded by selective switching onto a videorecorder.

Motion picture photography provides documentary coverage of a test run when desired.

Event recorders are used to set up automatic timers and record the open and closed position of all valves during a test run. Each valve is sequenced in the proper order and the test run proceeds automatically upon starting the main timer.

An automatic programmer provides a variety of ramps, curves, and steps to the servo valve controllers automatically during a test run.

The annunciator system monitors key safety limit parameters and will initiate a warning or shutdown.

The graphic panel indicates the condition of the test run at all times.

7.12 Data Acquisition System

7.12.1 General

The "B-3" facility data acquisition system equipment, Figures 18 and 19, is located in six areas as follows: test stand (test level), test stand Forward Instrument Rooms, "B" Control Building, Acquisition and Data Instrumentation Room, "B-3" Control Room in "B" Control Building, and "B" Control Building Terminal and Instrument Repair Room.

The "B-3" data acquisition system is compatible with the Plum Brook 30KC primary data system located in the "H" Building. All prime data is transmitted from the "B-3" test stand to the "H" Building for recording and processing. Analog signals terminate in a patchboard in the "H" Building from which they are patched into analog recording equipment.

7.12.2 "B-3" Test Stand (Test Level)

Instrument cabinets located at the test level contain the following equipment:

a. Thermocouple ovens - 288 channels plus space for 24 additional channels.

b. Liquid level gaging system.

c. Accelerometer signal conditioner - 18 channels.

7.12.3 "B-3" Forward Instrument Room

The following equipment is located in the above area:

a. Strain gage signal conditioners - 120 channels

b. Frequency to dc converters - 32 channels

c. Platinum Microdot Bridge - 12 channels

d. Platinum Resistance Thermometers - 40 channels

e. Scanner Signal monitor, 400 channels, digital voltohm meter, printer, scope, 4 test switches for strain gage signal conditioners.

f. Patchboard - 4896 points

g. Amplifiers - 88 channels

h. Sub-multiplexer system consisting of: 400 channel multiplexer, analog to digital converter, transmission unit, decimal readout, digital to analog converter, memoscope display.

7.12.4 "B" Control Building Acquisition Data Instrumentation Room

Located in the above area are instrument cabinets which contain "B-3" facility switching equipment and a "B-3" 4896 point patchboard.

7.12.5 "B" Control Building - "B-3" Control Room

The following equipment is housed in cabinets located in the "B-3" Control Room:

a. Six 4 channel strip chart recorder banks and control panels

b. 28 galvonometer driver amplifiers

52 channel direct writing oscillograph

36 channel direct writing oscillograph

c. X-Y plotter

d. "B-3" Analog Data Cable Switching Equipment Control Panel

e. Ampex tape deck, recorder electronics, speaker amplifiers, and speakers.

f. 100 Channel Events Recorder

g. Digital Frequency Counter

h. Frequency Counter Print-Out

i. S.E.L. Recorder Control Panel

Remote Control of Scanner

Remote Control of Calibration Signals

j. Timer for auto seq.

k. One cabinet for future instrumentation

8. Operation

The "B-3" facility operating procedure varies depending on the nature of each particular research program. The following is a typical sequence of events for a liquid hydrogen pump test.

In preparing the facility for a test run, some 25 engineers, mechanics, and technicians are required for a two day countdown. During this time all instrumentation is checked and calibrated, all supporting system operations are verified, high pressure gas trailers and liquid dewars brought into position, and run programmer and timers set up for the particular test sequence.

Prior to loading liquid hydrogen in the propellant tank, the transfer lines and tank are evacuated and inerted with helium, and the exhaust duct inerted with nitrogen.

At this point the "B-3" test stand is evacuated and all operation is from the "B-3" control room in the "B" Control Building.

The run tank is filled with liquid hydrogen.

With all systems in a ready condition and precooling of pump and feedline accomplished, the steam driven ejector system is brought on line.

When the exhaust duct pressure reaches 2 psia, the programmer timers start the test run.

After the test is completed, any remaining hydrogen in the run tank is back transferred and necessary procedures for securing the facility are carried out.

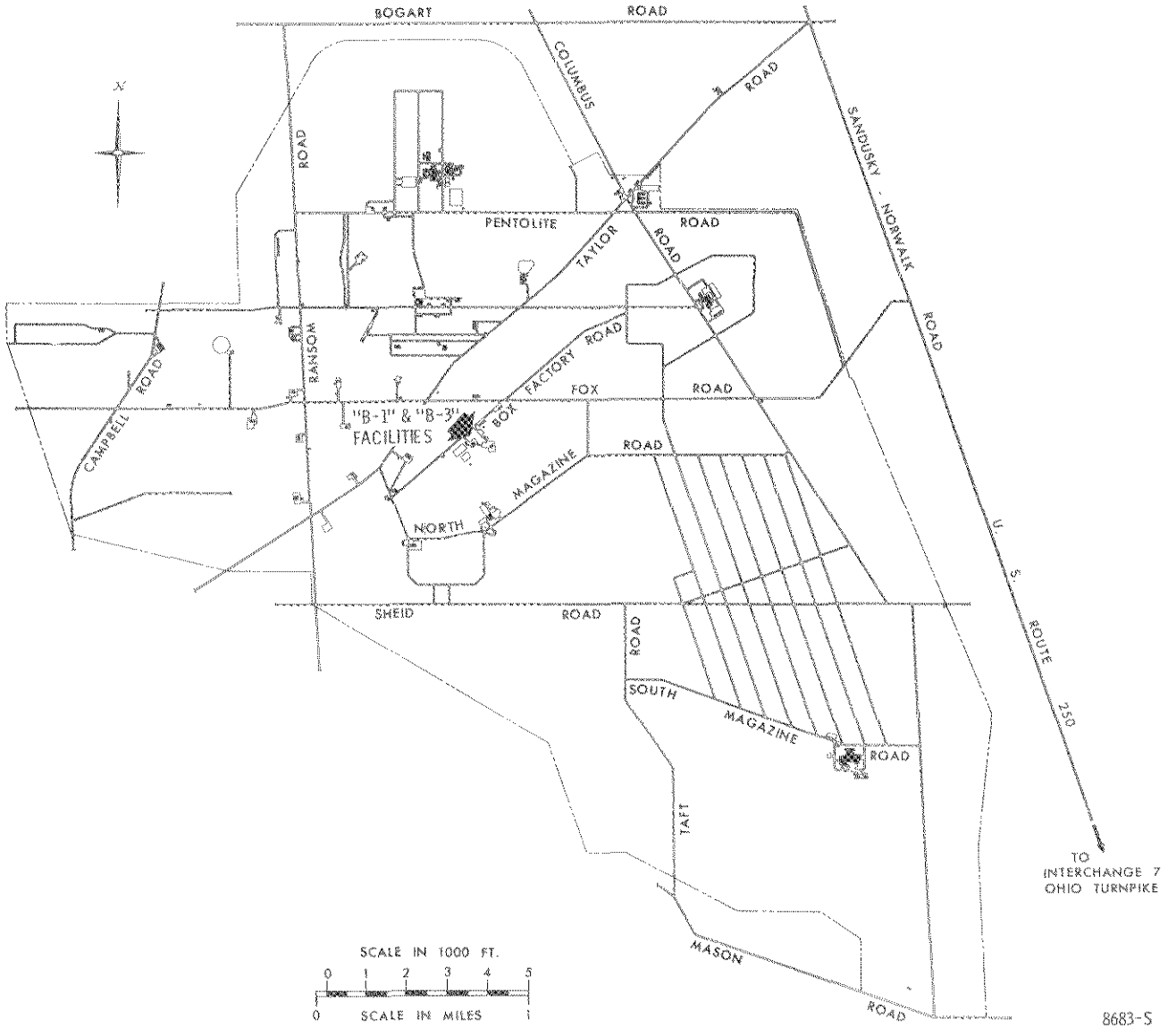

Figure 1. - Plot plan of Plum Brook station showing location of B-1 and B-3 facilities.

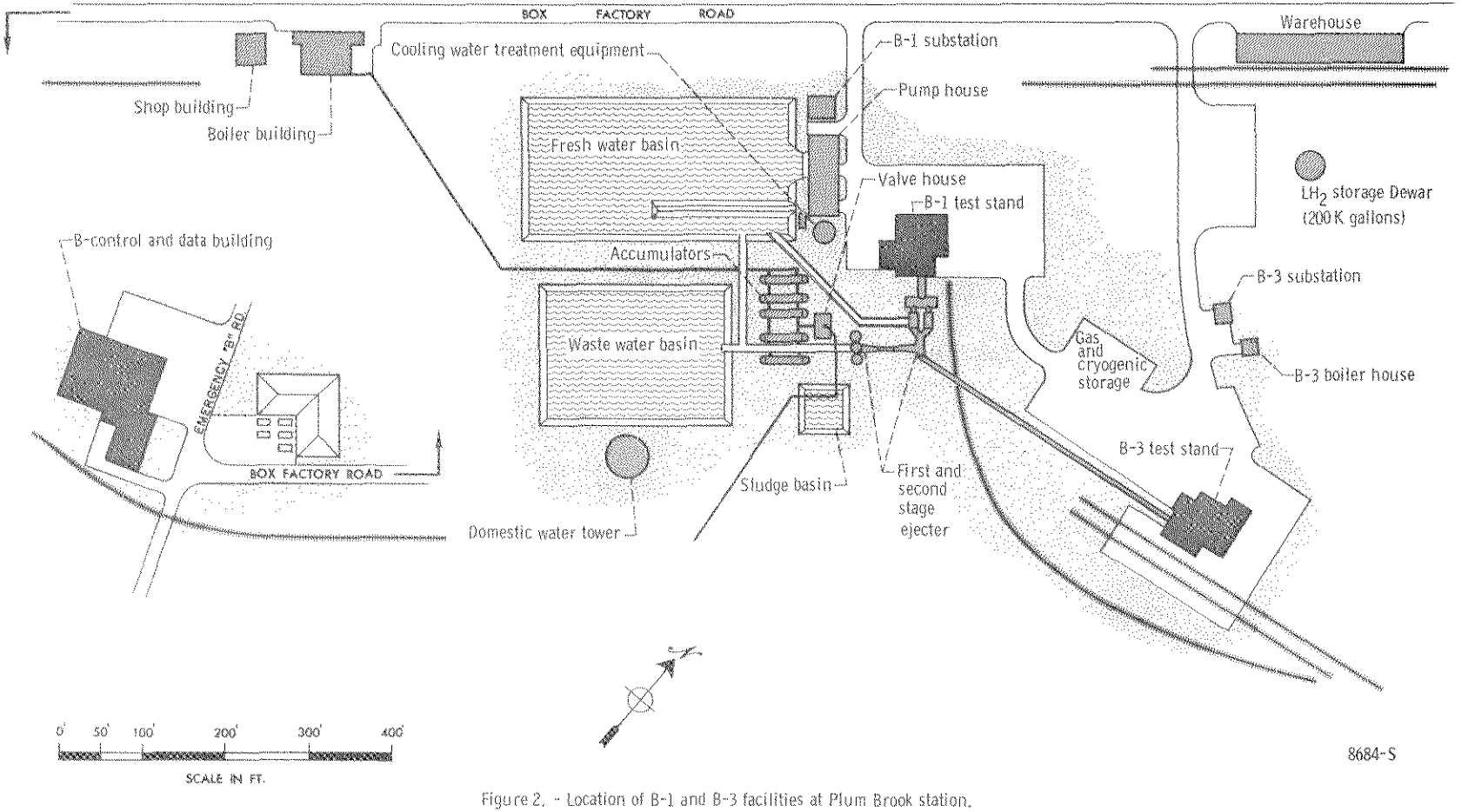

Figure 2. - Location of B-1 and B-3 facilities at Plum Brook station.

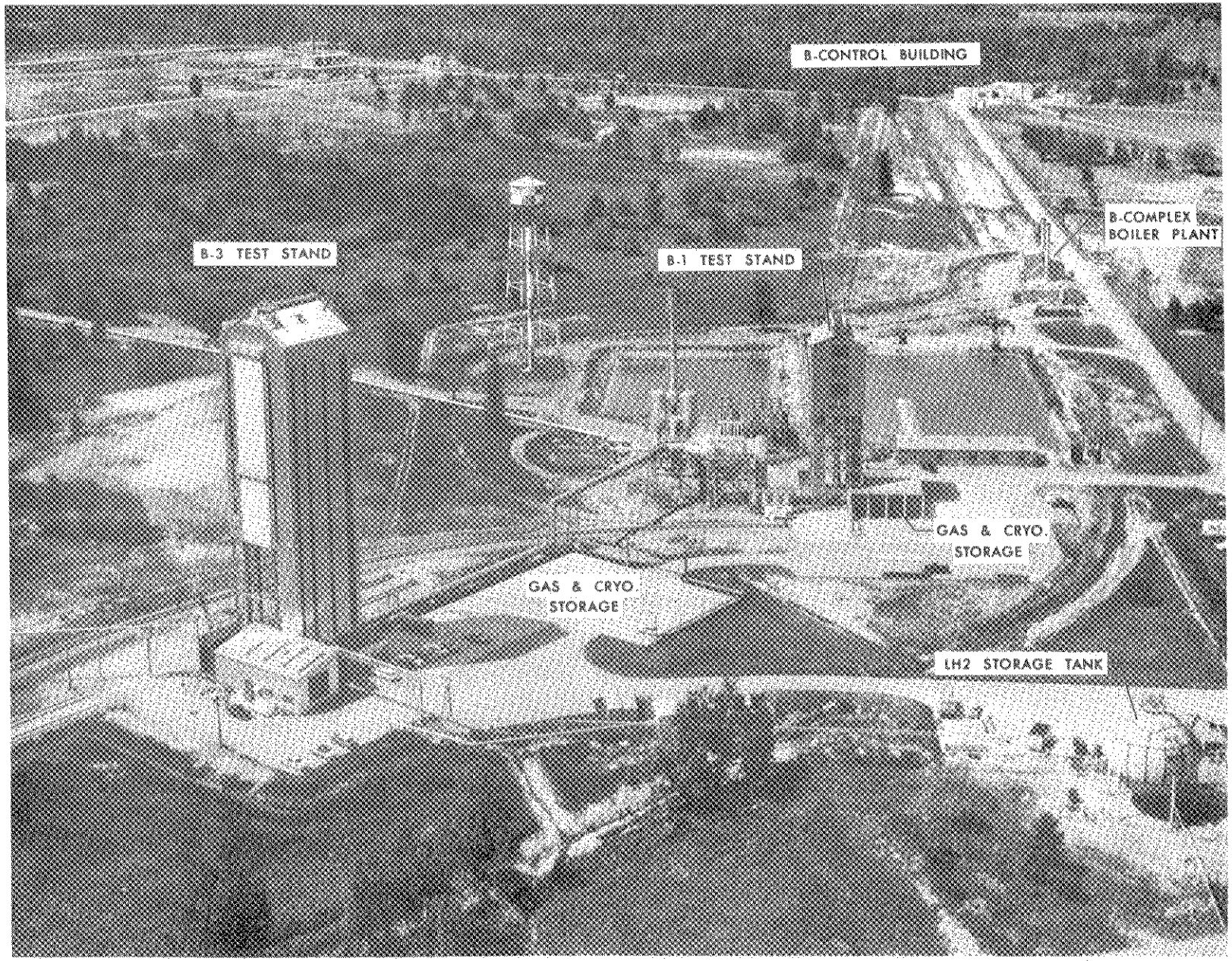

Figure 3. - General view of B-1 and B-3 facilities.

8694-S

E-3410-2

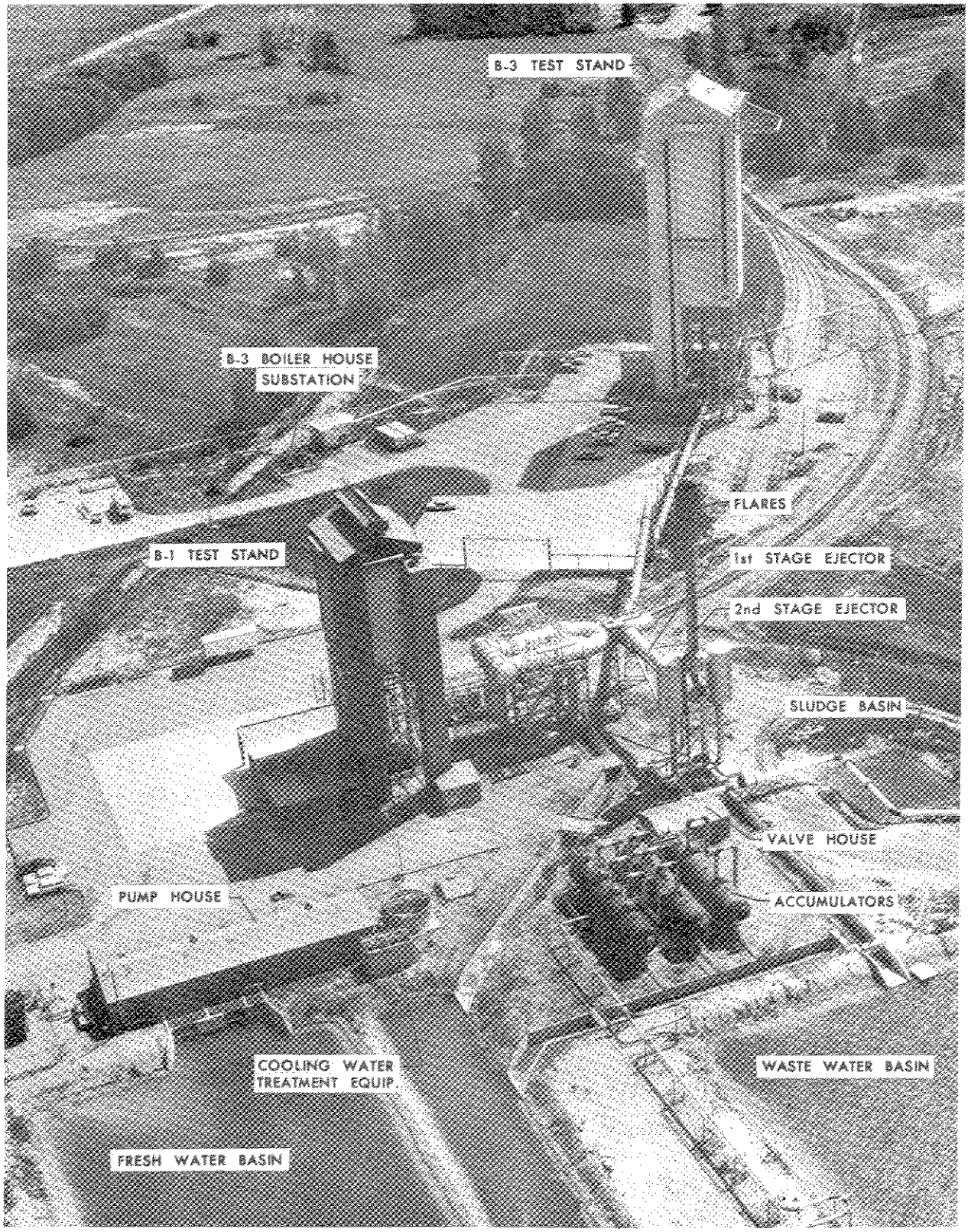

Figure 4. - Aerial view of B-1 and B-3 test stands.

8695-S

E-3410-2

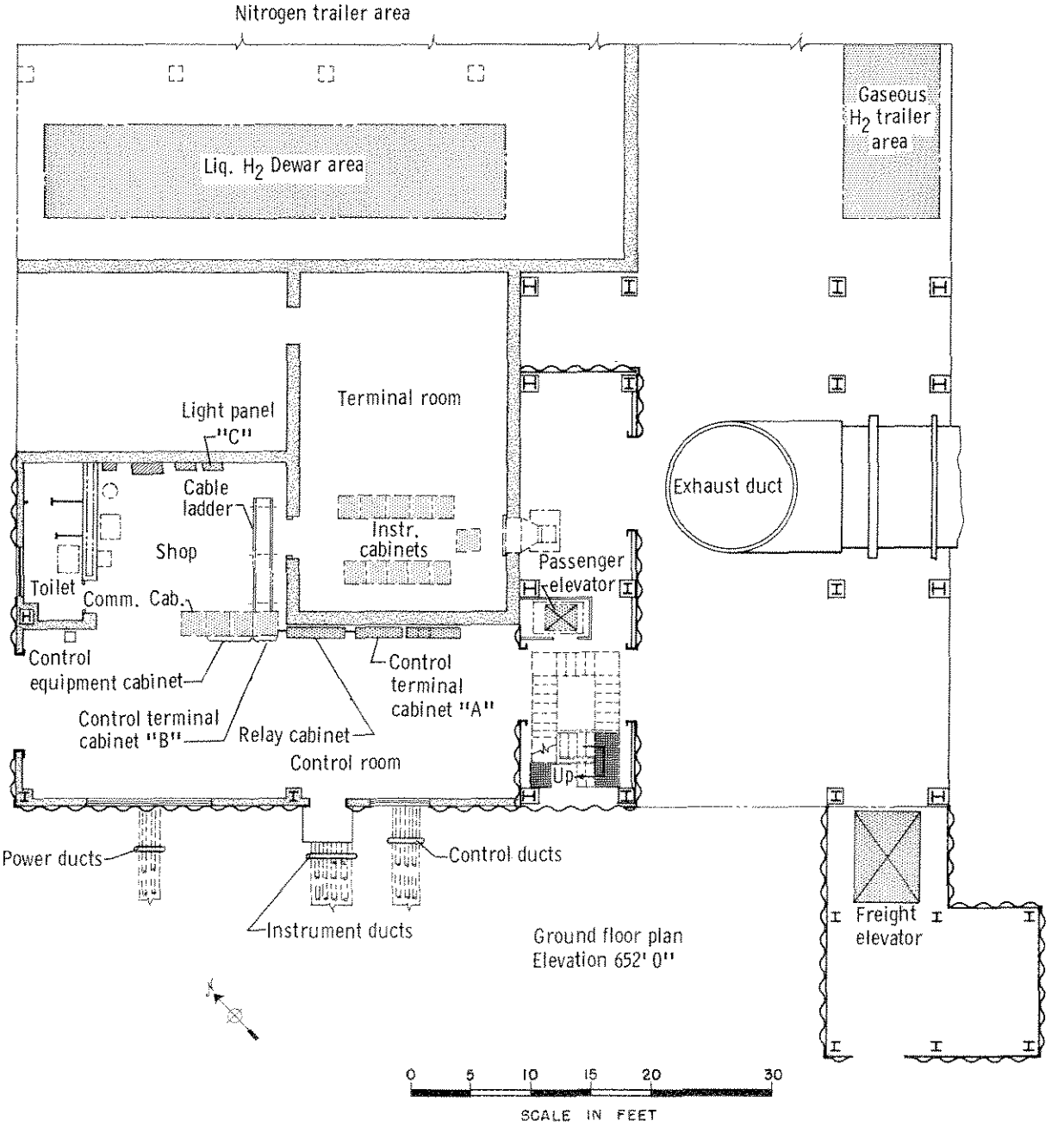

Figure 5. - B-1 test stand ground floor plan.

8704-S

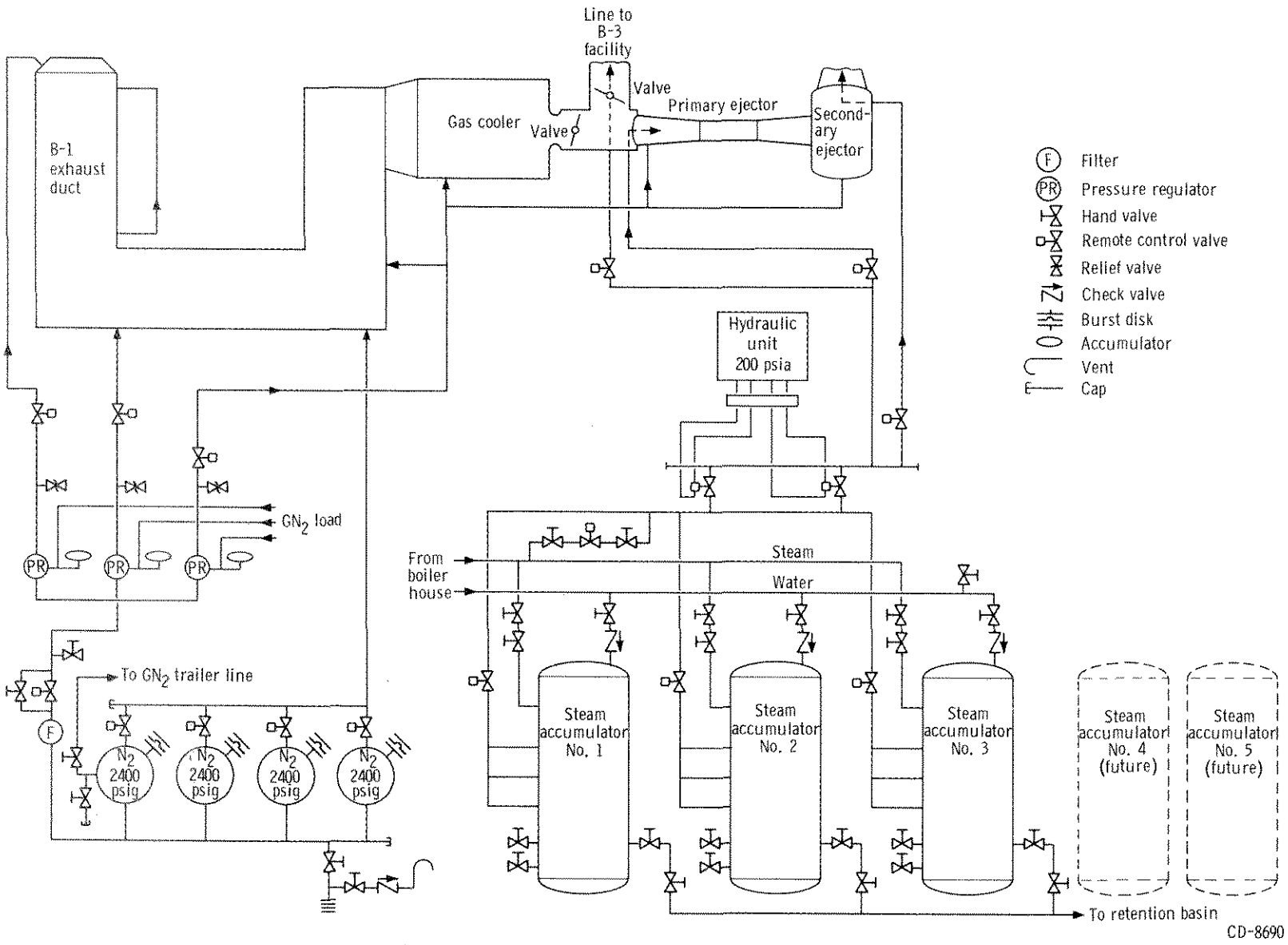

Figure 6. - B-complex altitude exhaust and bottled nitrogen systems.

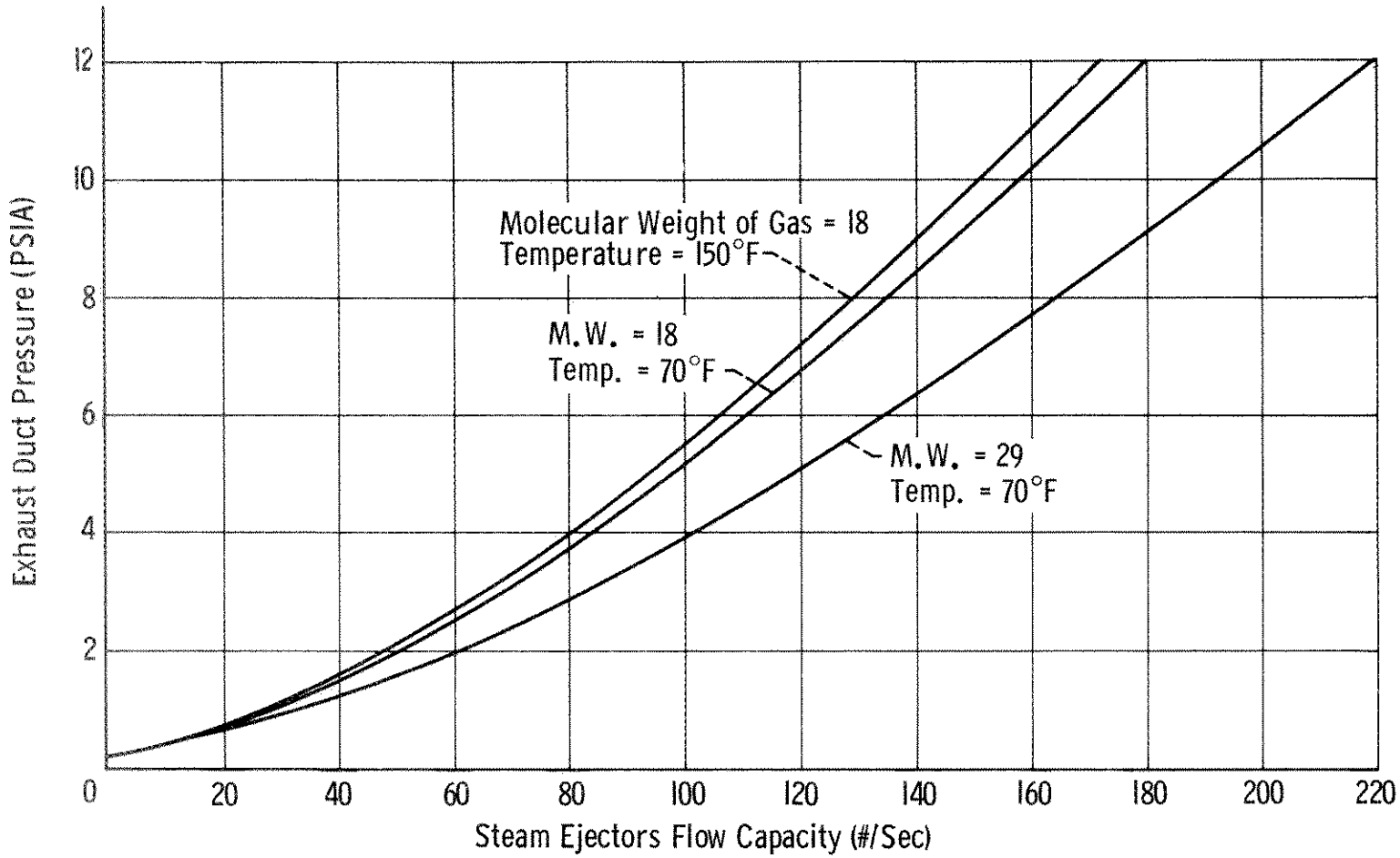

Figure 7. - B complex steam ejectors flow capacity vs exhaust duct pressure at inlet to first stage ejector.

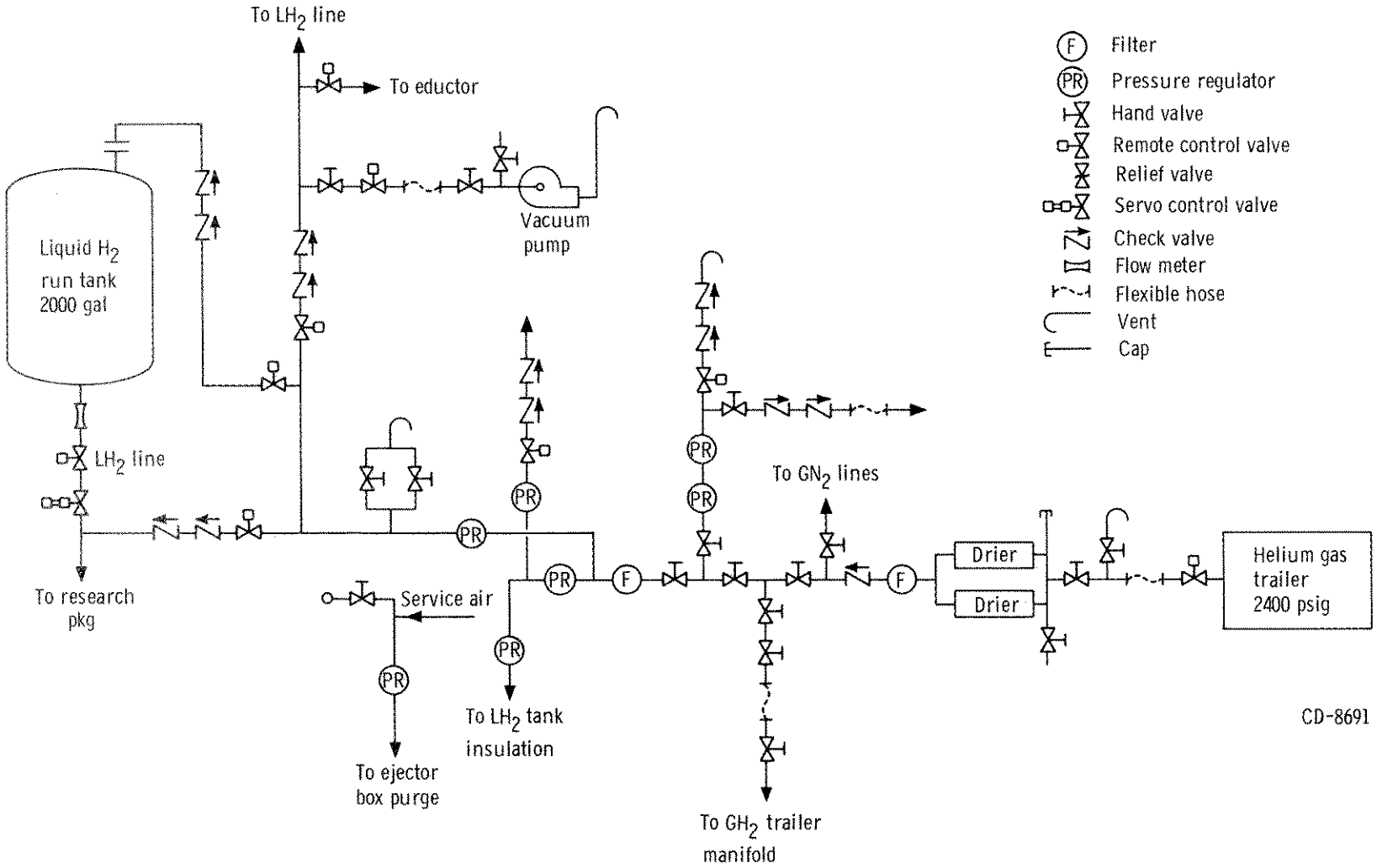

Figure 8. - B-1 helium system.

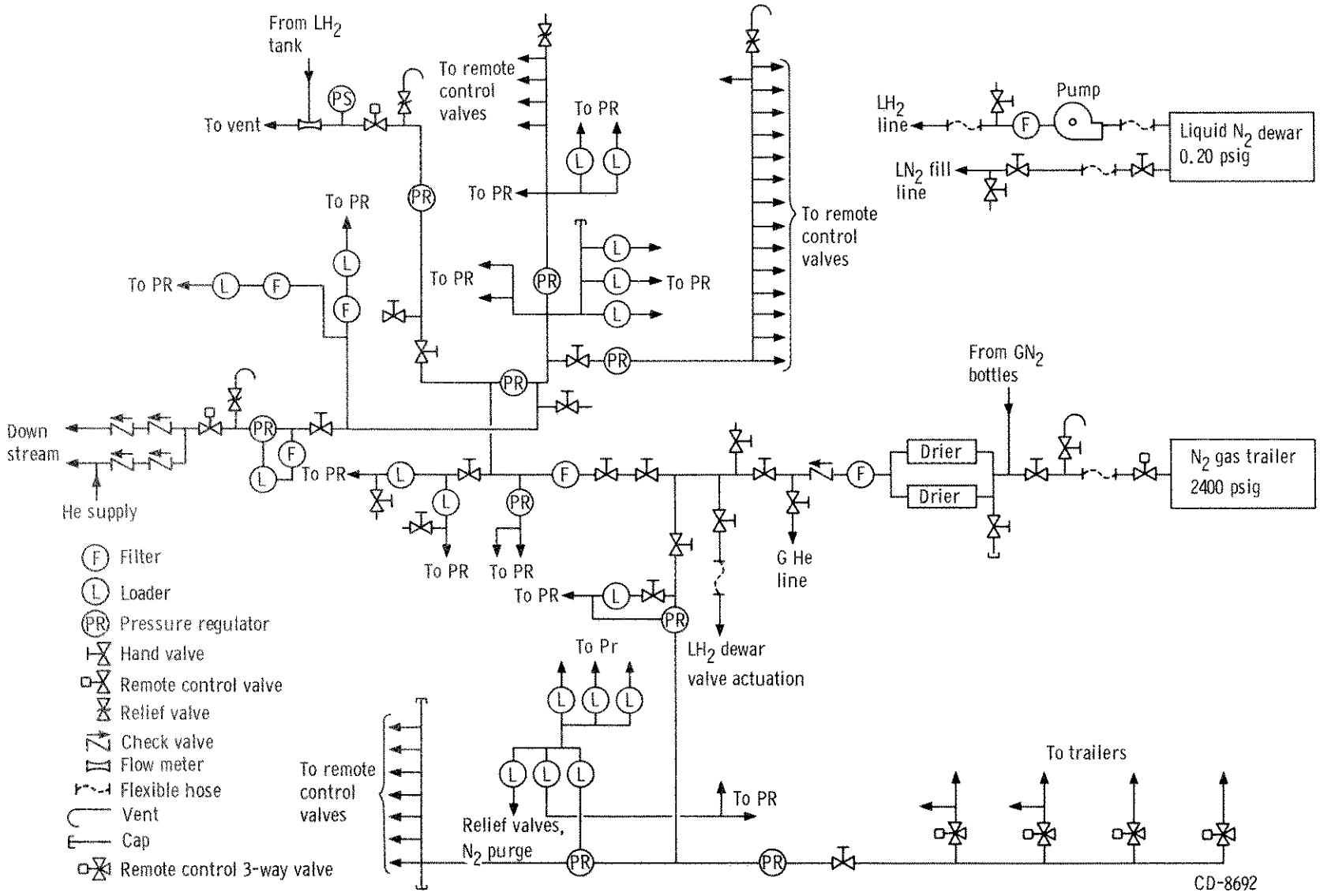

Figure 9. - B-1 nitrogen system.

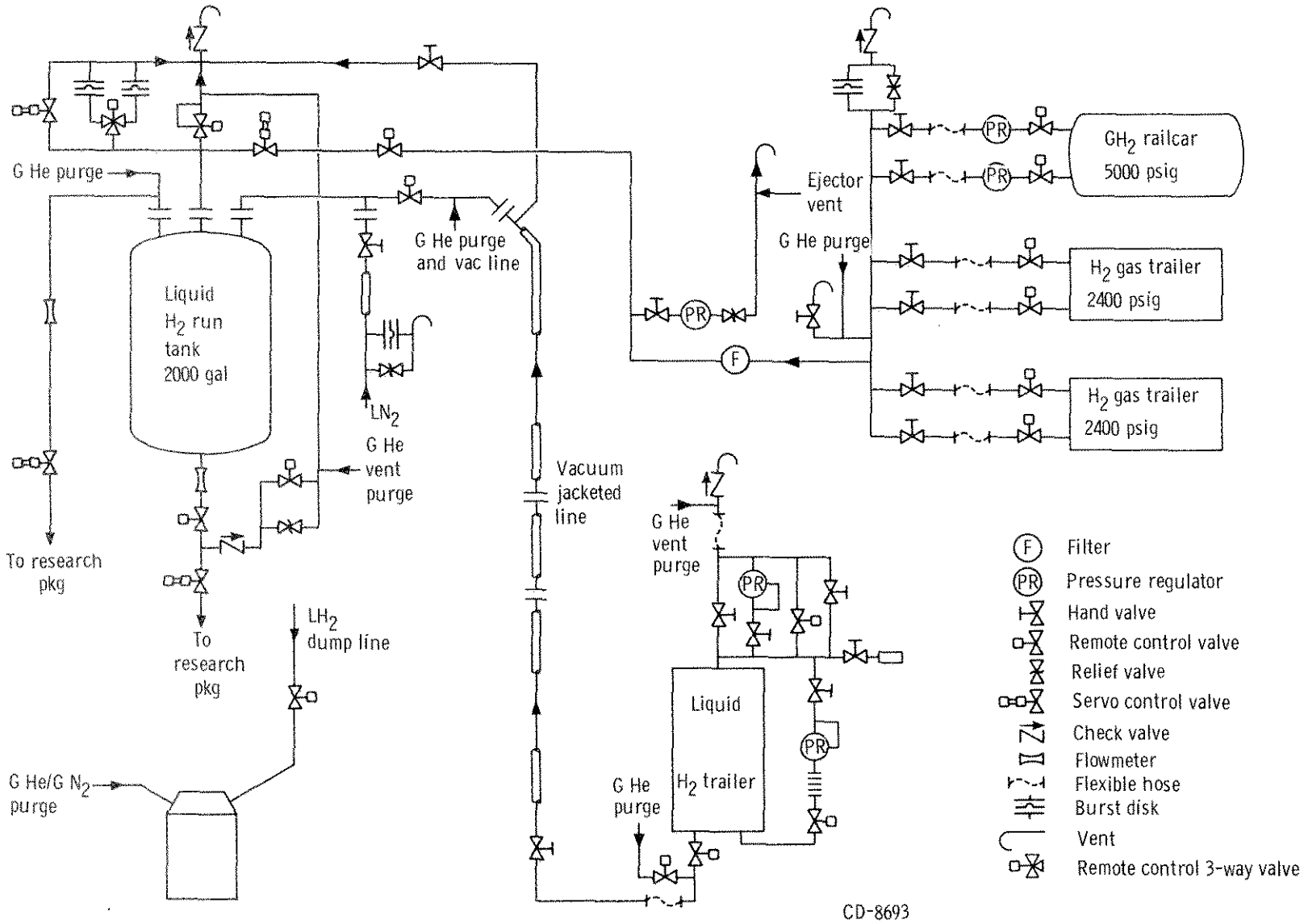

Figure 10. - B-1 hydrogen system.

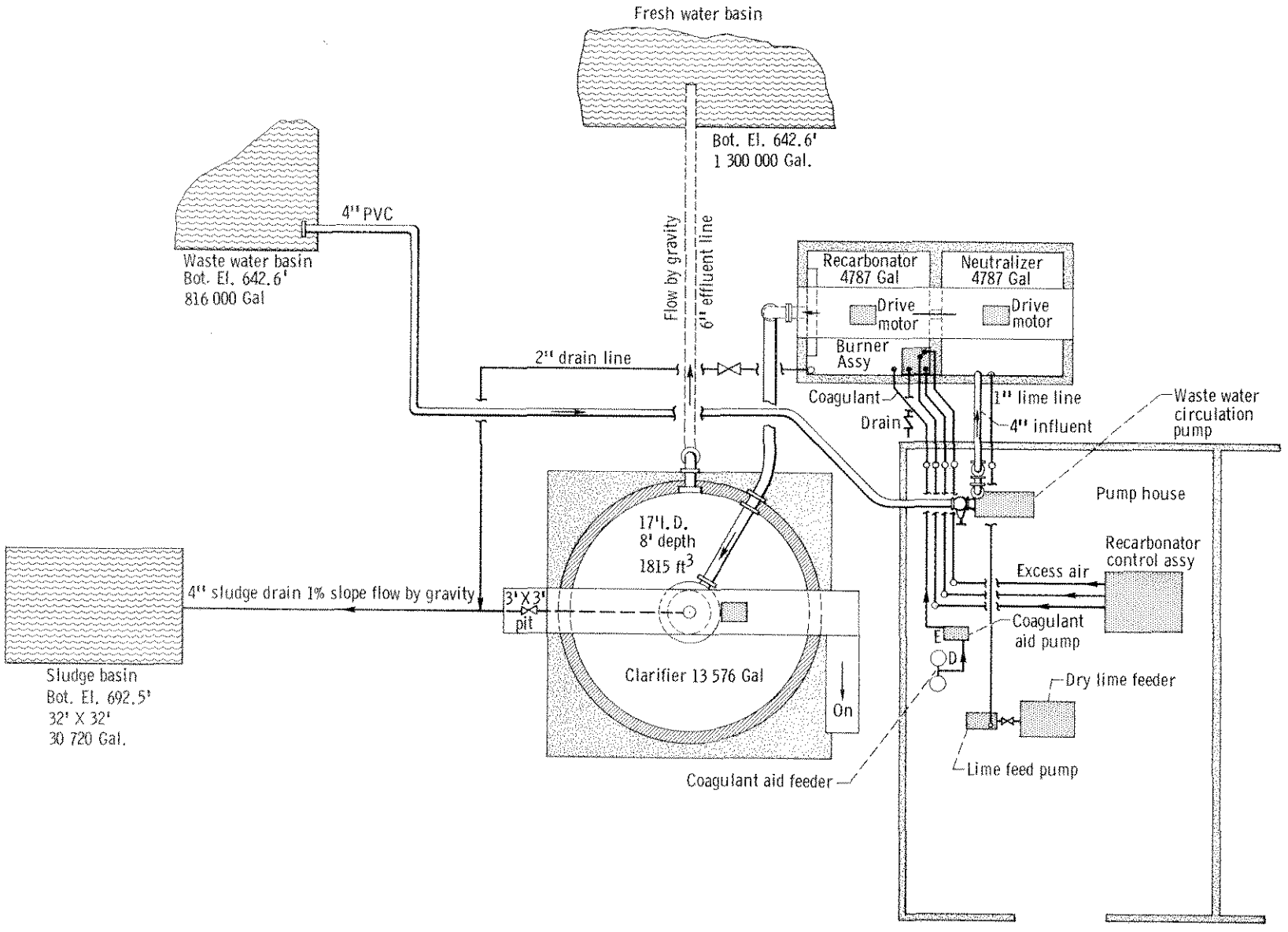

Figure 11. - B-1 waste cooling water treatment system.

8697-S

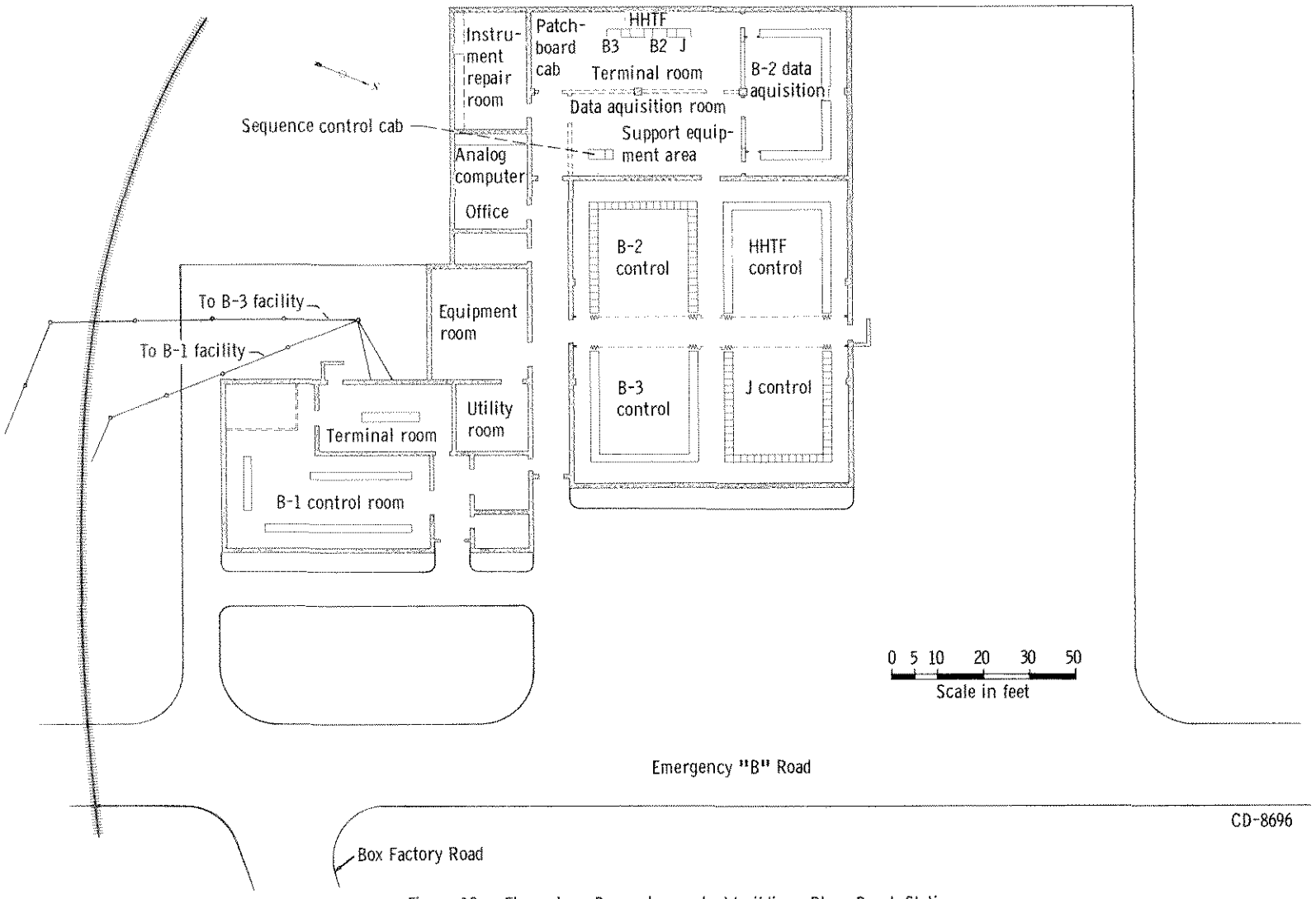

Figure 12. - Floor plan, B complex control building, Plum Brook Station.

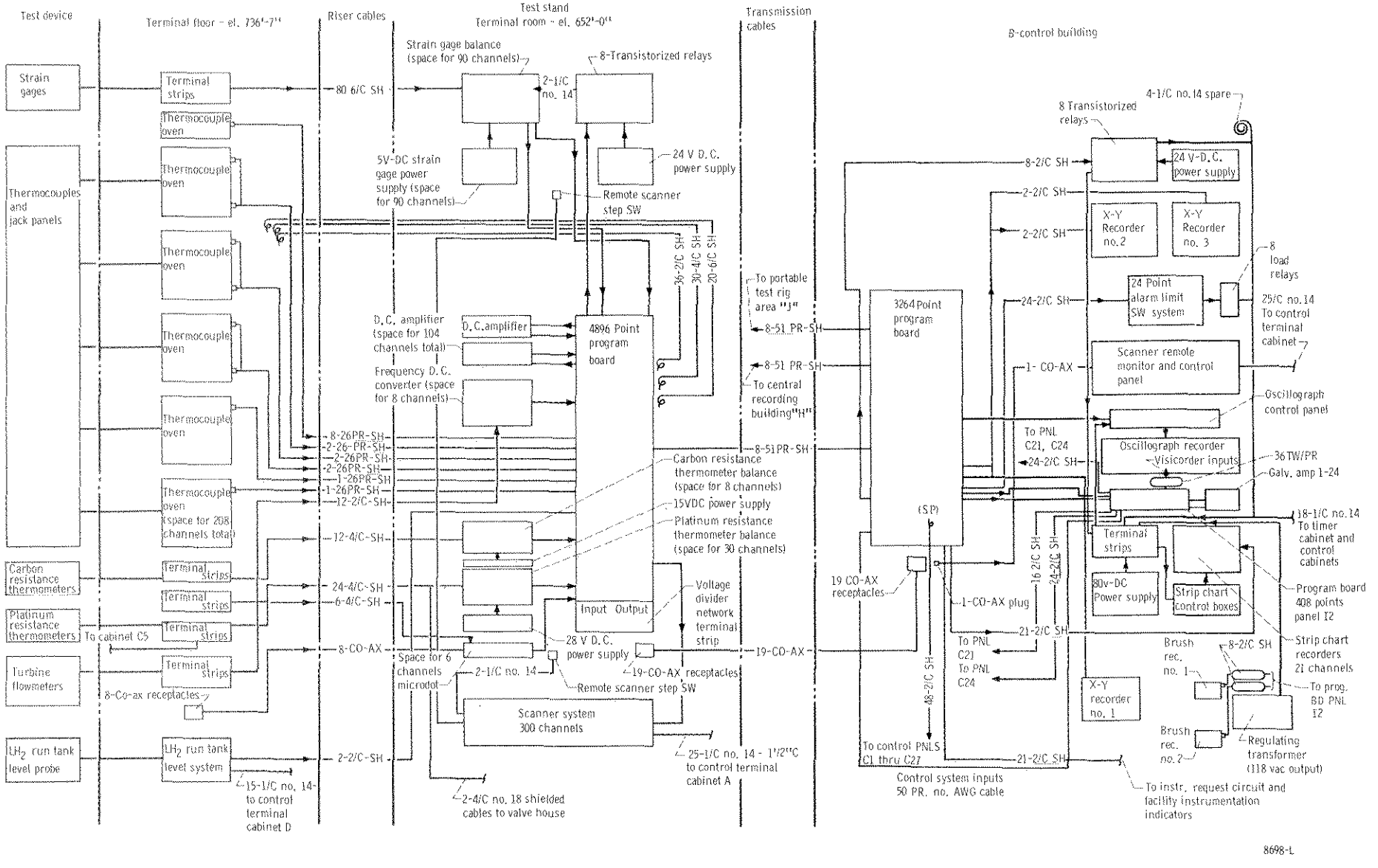

Figure 13. - Block diagram of "B-1" data acquisition system.

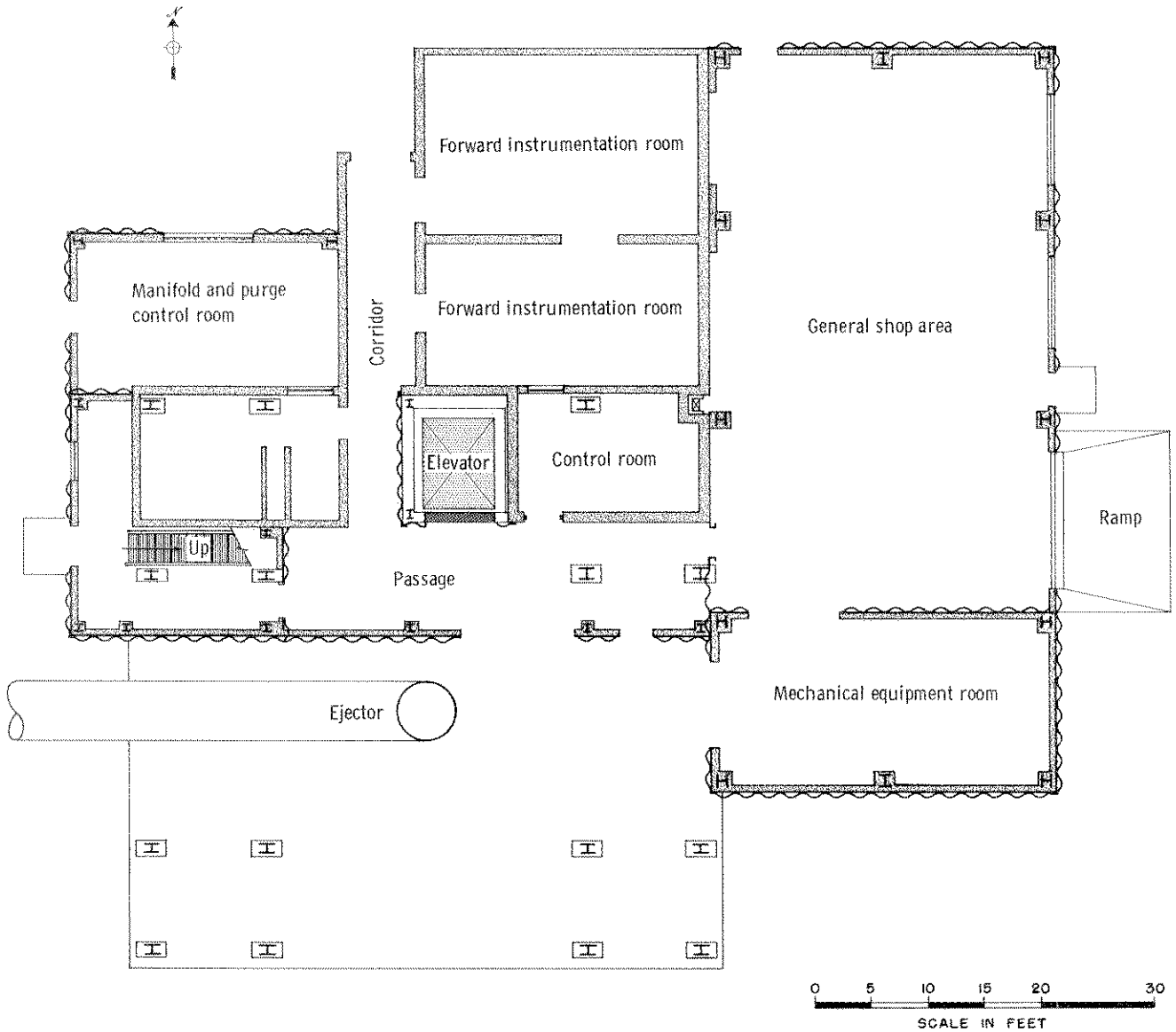

Figure 14. - B-3 test stand ground floor plan.

8699-S

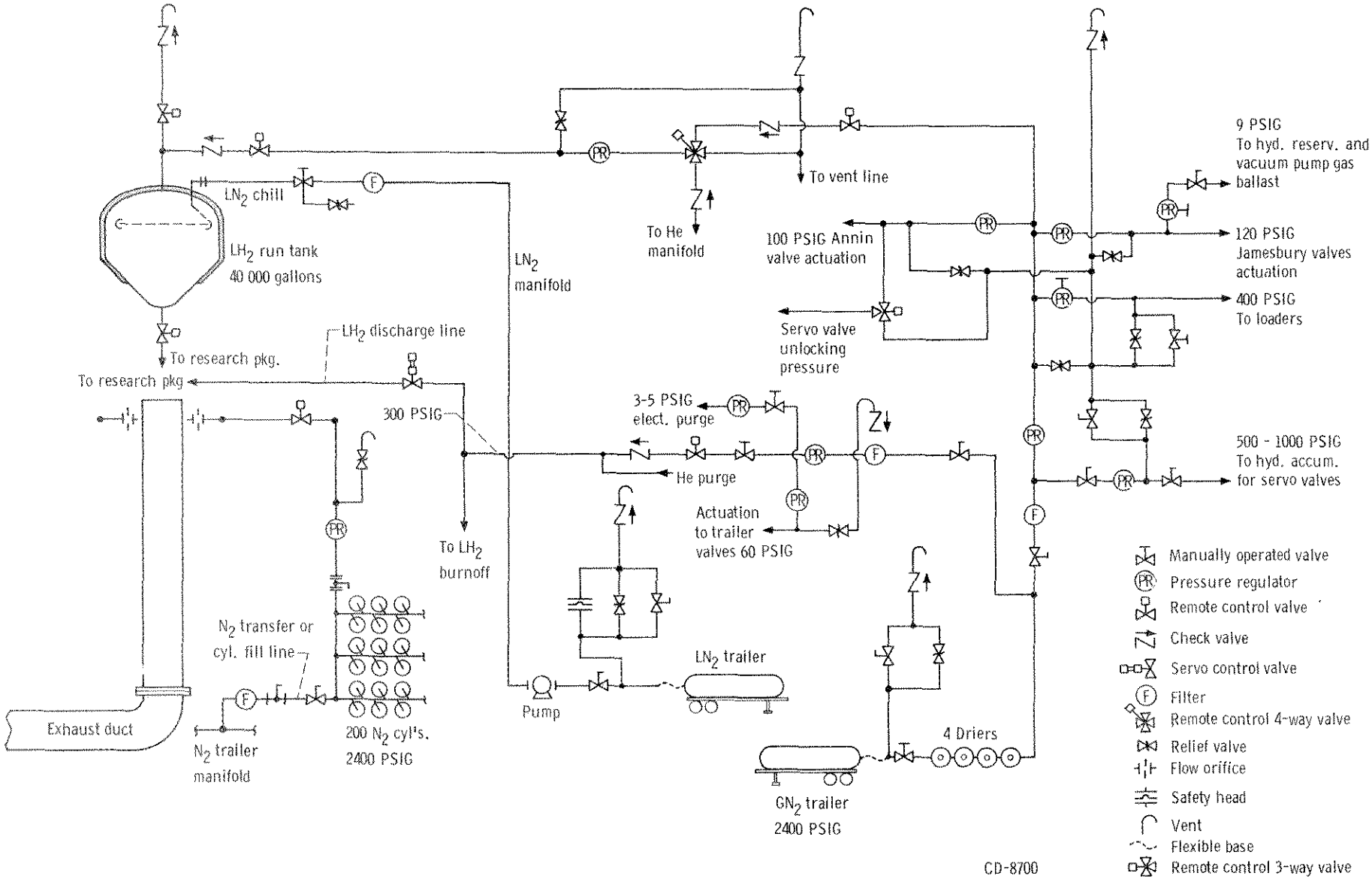

Figure 15. - B-3 nitrogen systems.

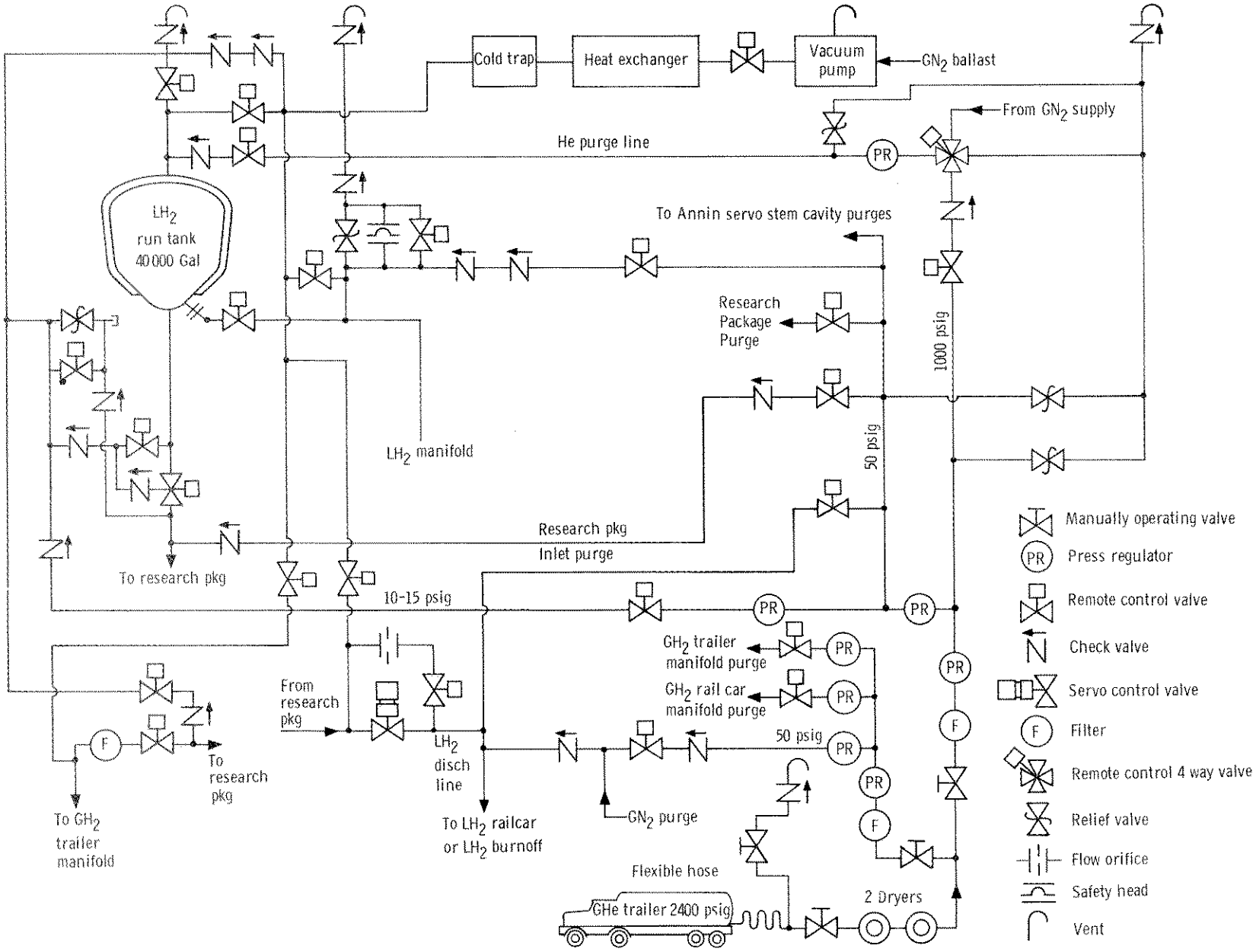

Figure 16. - B-3 helium system.

8689-S

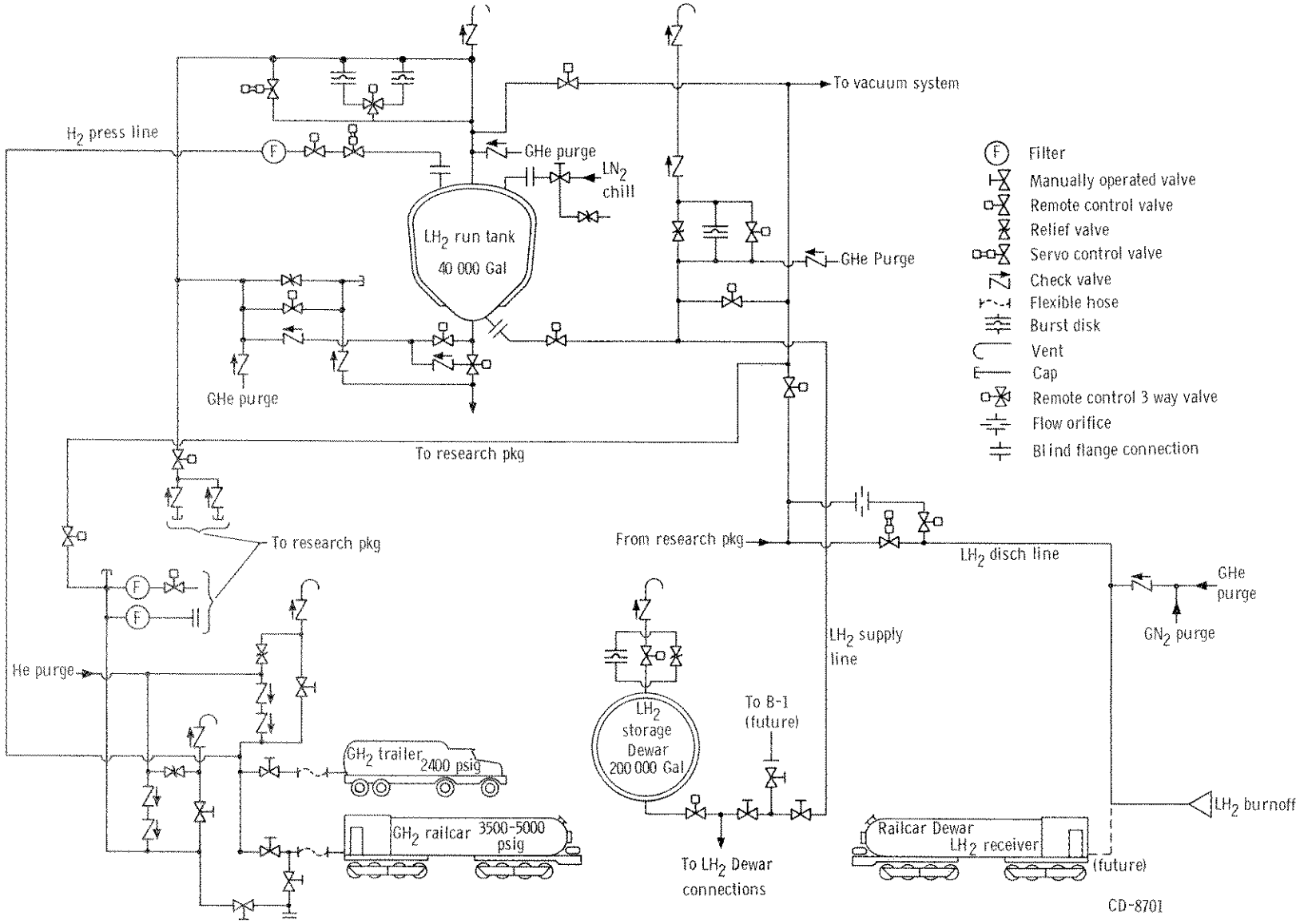

Figure 17. - B-3 hydrogen system.

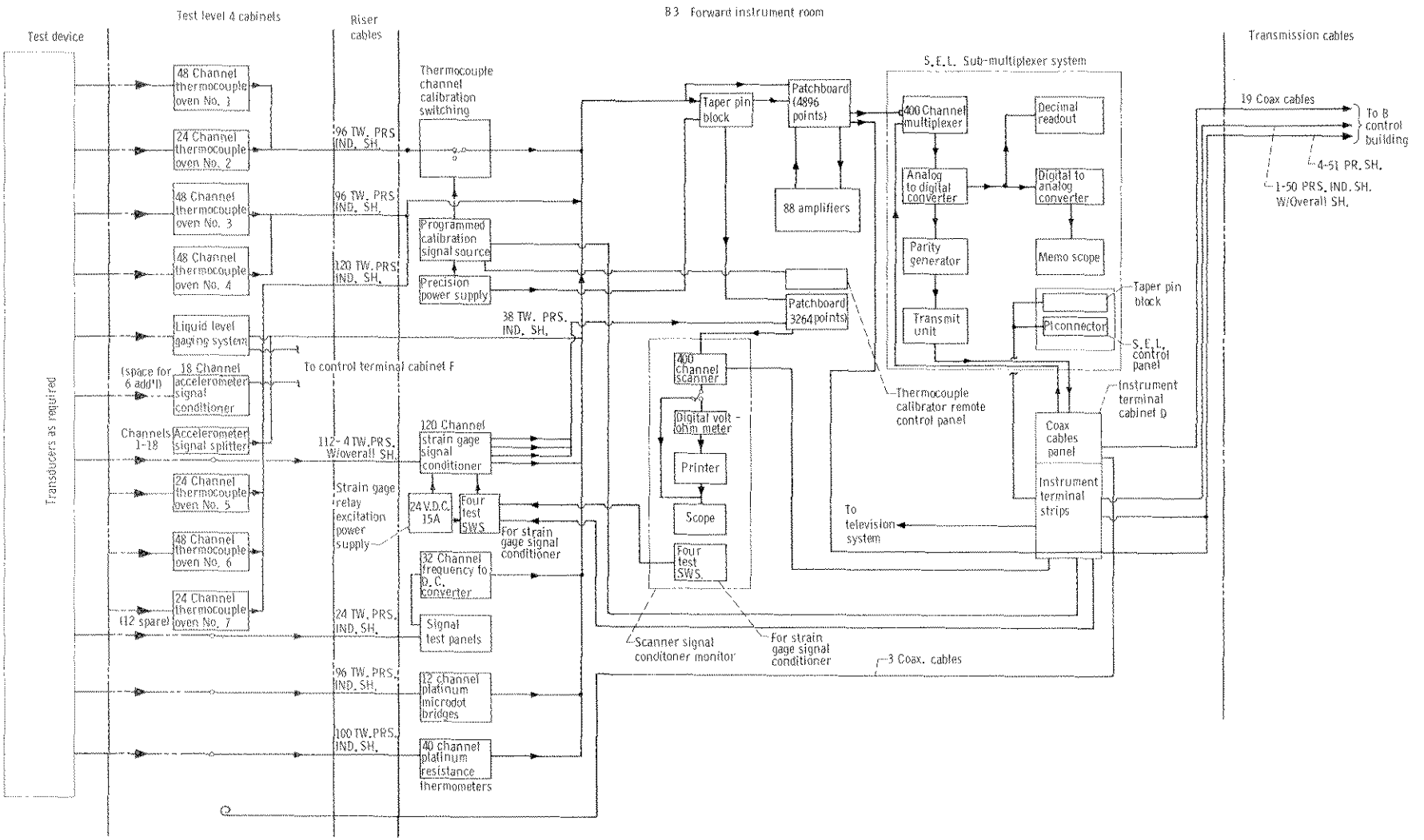

Figure 18. - B-3 data acquisition system - B-3 test stand.

8702-L

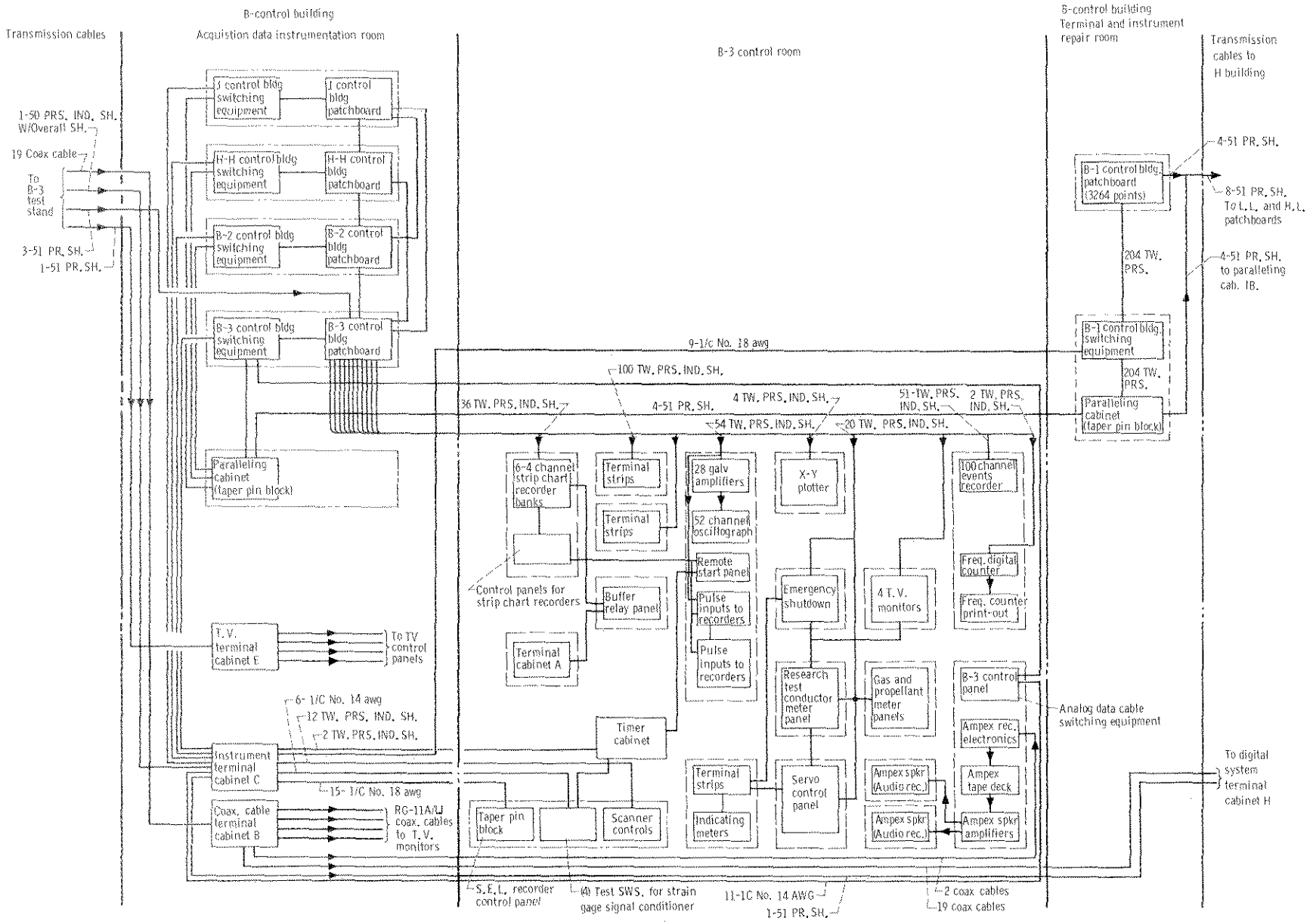

Figure 19. - B-3 data acquistion system - B control bldg.

8703-L